# **203-S** NEW CONSTRUCTION WALL WASH LED
# **FLS-2-WW** WALL WASH TRIM
# **NON-IC/IC-CP RATED** HOUSINGS

| | |
|---|---|
| Project Name | |
| Date | Type |
| Prepared By | |
| Comments | |
| Catalog # **203-S** - - / / **FLS-2-WW** - - / - | |


526 Portal Street
Cotati, CA 94931
USA
**P** 707.794.0888
www.8lighting.com



All No. 8 Lighting fixtures and components are UL Listed to both U.S. and Canadian requirements. No. 8 Lighting trims and lamp modules are protected by one or more U.S. Patents. No. 8 Lighting reserves the right to change details of design, materials, and finish.

© 2026 No. 8 Lighting
Doc # 91406-13.6


## PRODUCT FEATURES

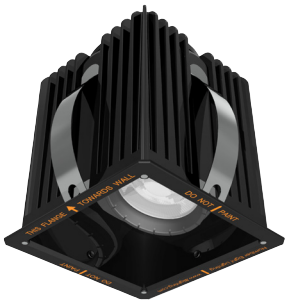

**203-S**
SQUARE WALL WASH LIGHT ENGINE

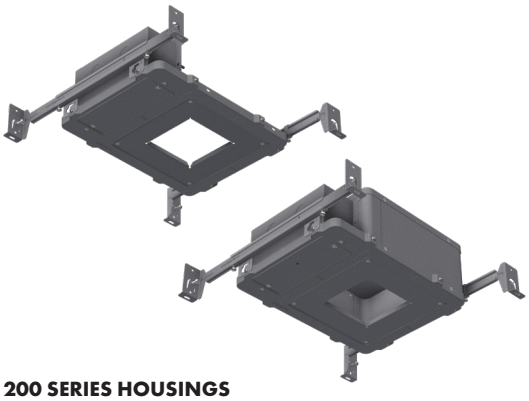

**200 SERIES HOUSINGS**
TYPE NON-IC or IC-CP RATED for SQUARE TRIMS

**200 SERIES TRIMS**
FLANGED or FLANGELESS

## **203-S** SPECIFICATION SUMMARY

| | Static White | | | | Warm Dimming | | |
|---|---|---|---|---|---|---|---|
| LED Option | **HI-27** | **HI-30** | **HI-35** | **HI-40** | **WD** | **WD-2** | **WD-4** |
| Delivered Lumens | 1006 | 1046 | 1070 | 1095 | 906 | 887 | 923 |
| System Wattage | 13.5 | 13.5 | 13.5 | 13.5 | 13.5 | 13.5 | 13.5 |
| Efficacy | 76 | 79 | 81 | 83 | 67 | 66 | 69 |
| CRI | 93+ | 93+ | 93+ | 93+ | 92+ | 92+ | 92+ |
| R9 | 66 | 68 | 73 | 70 | 79 | 67 | 69 |
| CCT | 2700K | 3000K | 3500K | 4000K | 3000-1800K | 2800-2200K | 3000-2200K |
| Color Consistency | 2-Step | | | | 3-Step | | |
| Optic Options | 40, 60 | | | | | | |
| Optical Accessories | N/A | | | | | | |
| Adjustability | Fixed Position (20° Wall Wash) | | | | | | |
| Driver Options | <1/5% Forward/Reverse Phase (120v), 0.1/1/5% 0-10v (120-277v), 0.1/1% DALI (120-277v), 0.1/1% EcoSystem (120 or 277v) | | | | | | |
| Trim | Square Wall Wash | | | | | | |
| Finish Options | White, Oil-Rubbed Bronze, Satin Aluminum, Satin Aluminum w/ White Flange | | | | | | |
| Trim Mounting Options | Flanged, Flangeless Sheetrock, Flangeless Wood | | | | | | |
| Trim Accessory | UL Wet Listed Wall Wash Lens | | | | | | |
| Housing Options | New Construction: Type Non-IC Air-Tight, Type IC-CP Rated CCEA Approved Air-Tight | | | | | | |

Performance data shown with FLS-2-WW Trim and 60° optic.
Warm Dimming data shown for 3000K and 2800K.
See Performance Summaries for additional information.

## PRODUCT SPECIFIER/PRODUCT ORDER NUMBER

**203-S** – _____ – _____ / _____ /

LIGHT ENGINE - LED OPTIONS - OPTIC OPTIONS / DRIVER OPTIONS /

**203-S**
Wall Wash NEW CONSTRUCTION AIRTIGHT Light Engine with fixed 20° tilt for SQUARE WALL WASH trim

**HI-27**
2700K 93+ CRI White

**HI-30**
3000K 93+ CRI White

**HI-35**
3500K 93+ CRI White

**HI-40**
4000K 93+ CRI White

**WD-5**
3000-1800K 92+ CRI Warm Dim

**WD-6**
2800-2200K 92+ CRI Warm Dim

**WD-7**
3000-2200K 92+ CRI Warm Dim

**40**
Flood

**60**
Wide Flood

**PR1-2**
Premium Forward or Reverse-Phase <1% Dimming

**DIM3-2**
Forward or Reverse-Phase 5% Dimming

**DIM4-2**
0-10v 5% Dimming

**EL1-2**
EldoLED 0-10v 1% Dimming

**EL1-01-2**
EldoLED 0-10v 0.1% Dimming

**EL2-2**
EldoLED DALI 1% Dimming

**EL2-01-2**
EldoLED 0.1% DALI Dimming

**LU2-2**
Lutron Hi-Lume LDE1 EcoSystem 1% Dimming

**LU4-2**
Lutron Hi-Lume PEQ0E EcoSystem 0.1% Dimming

**FLS-2-WW** – _____ – _____ / _____ – _____

TRIM - TRIM FINISH - TRIM MOUNTING ACCESSORIES (Optional) / HOUSING OPTIONS - MOUNTING OPTIONS

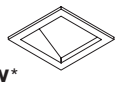

**FLS-2-WW***
4-1/4" SQUARE WALL WASH with 2-3/4" angle-cut aperture and wall wash lens

*UL Wet listed.

**WH**
WHITE

**OB***
OIL-RUBBED BRONZE

**SA*†**
SATIN ALUMINUM

**SAWH*†**
SATIN ALUMINUM with WHITE flange

*Specialty finish.

†Not available with FLAT trim option.

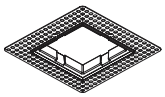

**FS-2***
SQUARE FLANGELESS trim accessory for flush mounting FLS-2, FLS-2-BV, or FLS-2-WW trims in sheetrock ceiling applications

*For use with NIC-FS or IC-CP-FS housing options only.

**NIC-S**
Type Non-IC for SQUARE flanged trim applications

**NIC-FS***
Type Non-IC for SQUARE flangeless trim in sheetrock applications

**NIC-FS-W**
Type Non-IC for SQUARE flangeless trim in wood/stone applications

**IC-CP-2-S**
Type IC Chicago Plenum Rated for SQUARE flanged trim applications

**IC-CP-2-FS***
Type IC Chicago Plenum Rated for SQUARE flangeless trim in sheetrock applications

**IC-CP-2-FS-W**
Type IC Chicago Plenum Rated for SQUARE flangeless trim in wood/stone applications

*Requires FS-2 flangeless trim accessory.

**BH**
Bar Hangers for joist mounting

**BB**
Butterfly Brackets for c-channel or bar mounting

**TBC-BH**
T-Bar Mounting Clips + Bar Hangers for T-Bar mounting

**PMB**
Panel Mounting Brackets (set of two) for direct mounting to wood panels

### Light Engine, LED, Optic Option, and Accessory Notes

**203-S** Wall wash NEW CONSTRUCTION light engine with fixed 20° tilt for SQUARE WALL WASH trim. Light engine meets Washington State Airtight Standard WAC 51-11-0502 and in accordance with ASTM E283 to reduce energy loss. Use for wall wash lighting applications. To ensure fixture to fixture color consistency, use of the same LED option with adjacent fixtures is recommended. One field interchangeable optic option included standard.

### Driver and Output Option Notes

0-10v driver options are configured for linear control. DALI driver options are configured for logarithmic control. No.8 Lighting conducts extensive testing to establish compatibility with many dimmer types. For a complete list of compatible dimmers, see 8lighting.com/resources-downloads. Outputs vary depending on LED type, trim type, and optical accessories used. For photometric files in PDF and IES formats, see: 8lighting.com/200-series-photometry.

### Trim Finish and Accessory Notes

White trim finish is field paintable to match ceiling color. Lot variations may occur with specialty finishes. Ordering ALL trim kits at the same time is recommended to minimize finish variations. Trim lens accessories are factory installed into trim plates and are UL WET LISTED and rated for use in DRY, DAMP, or WET locations (covered ceiling applications only). Approved for use in residential steam applications. Not for use in commercial steam applications.

### Housing and Installation Notes

Type Non-IC housings are rated for installations where insulation is held back a minimum of 3" away from sides and top. Type IC-CP housings are rated for direct contact with standard or spray-foam thermal insulation with a max combined R-Value of R42. Type IC-CP housings meet Washington State Airtight Standard WAC 51-11-0502 and in accordance with ASTM E283 to reduce energy loss and are CCEA plenum rated for City of Chicago environmental air spaces. For installations in direct contact with thermal insulation, ambient temperatures in ceiling space should not exceed 25°C (77°F) during normal operation. For installations where insulation is held back a minimum of 3" from sides and top, ambient temperatures in ceiling space should not exceed 40°C (104°F) during normal operation.

### Warranty

All No. 8 Lighting products are covered by a 5 year limited warranty. Products installed in residential steam applications are covered by a 2 year limited warranty. For specific warranty details and limitations, see: 8lighting.com/resources-downloads.

**JA8-2025 CA Title 24 Compliant** except with Type Non-IC housing options: **NIC-S**, **NIC-FS**, and **NIC-FS-W**.

## **203-S + NIC-S** and **IC-CP-2-S** NEW CONSTRUCTION HOUSINGS with FLANGED TRIM INSTALLATION

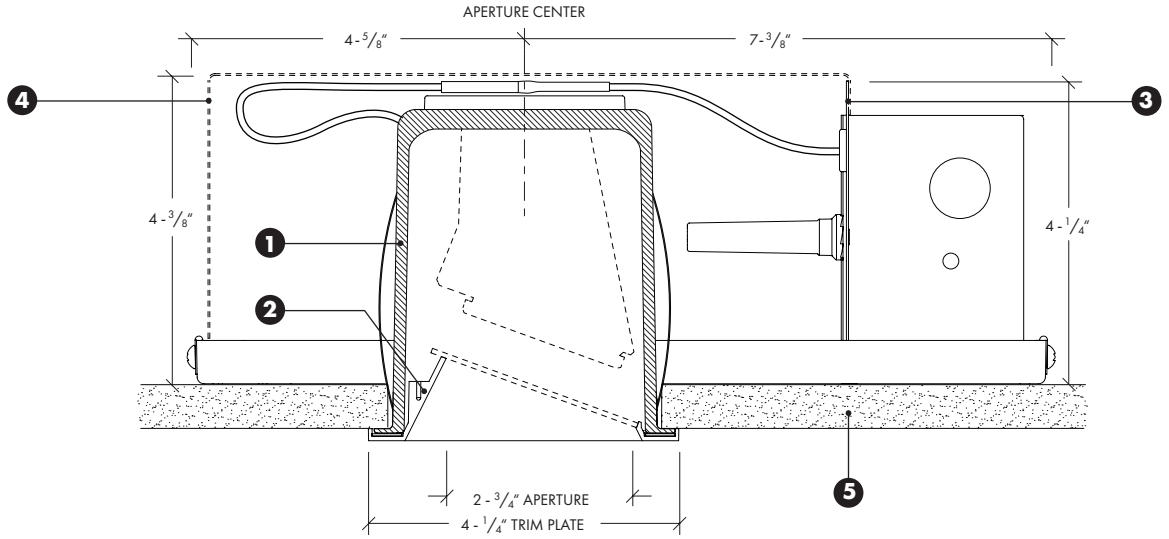


**1) 203-S** Wall Wash SQUARE Light Engine with fixed 20° tilt.

**2) FLS-2-WW** Flanged SQUARE WALL WASH Trim.

**3) NIC-S** Type Non-IC housing and power supply for SQUARE Light Engine and FLANGED Trim installation.

**4) IC-CP-2-S** (shown dashed) Type IC Rated/Air-tight/CCEA approved housing and power supply for SQUARE Light Engine and FLANGED Trim installation.

**5) Ceiling Material** (Sheetrock/Wood/Stone/Acoustic Tile) Accommodates ceiling thicknesses from 1/2" (min) to 1-1/2" (max) without affecting aiming or rotation.

## **203-S + NIC-S** and **IC-CP-2-S** NEW CONSTRUCTION HOUSINGS with FLANGED TRIM INSTALLATION

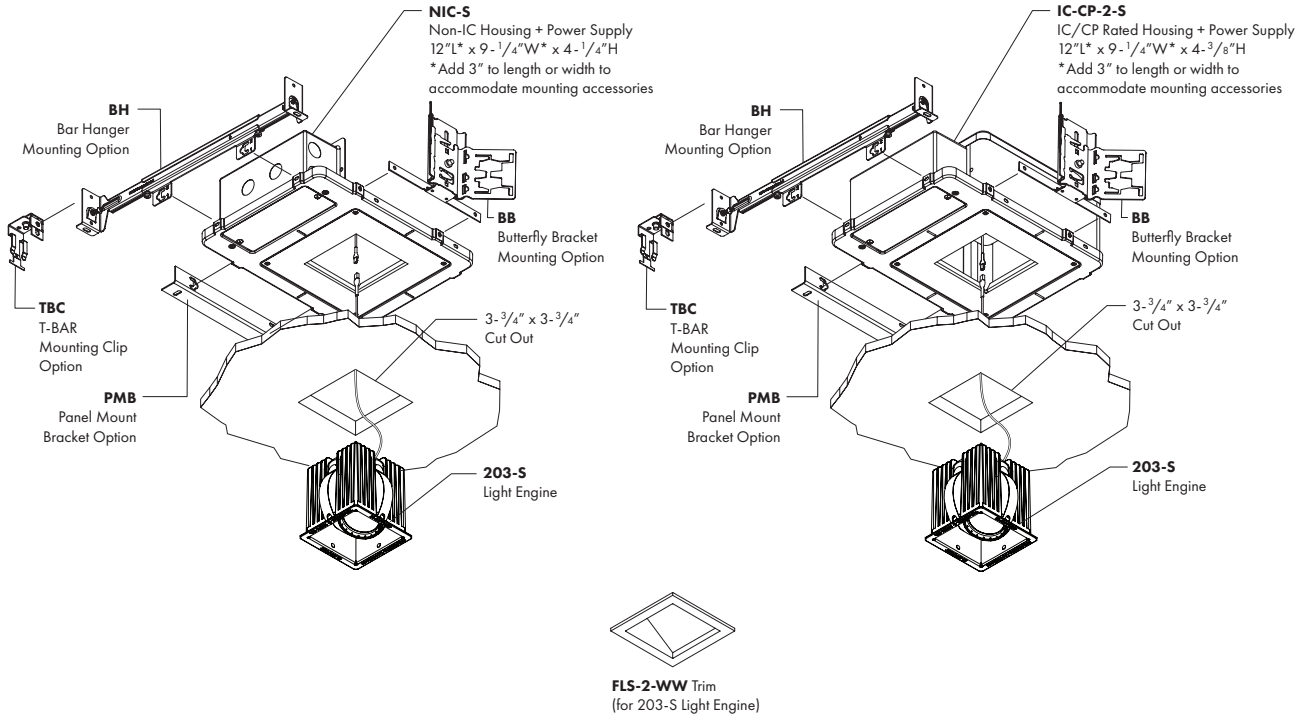


**CEILING TYPES:** Sheetrock, Wood, Stone & Acoustic Tile | **CEILING THICKNESS:** 1/2" Min to 1- /2" Max | **CUT-OUT:** 3-3/4" x 3-3/4"

## **203-S + NIC-FS** and **IC-CP-2-FS** with FLANGELESS TRIM INSTALLATION for SHEETROCK CEILINGS

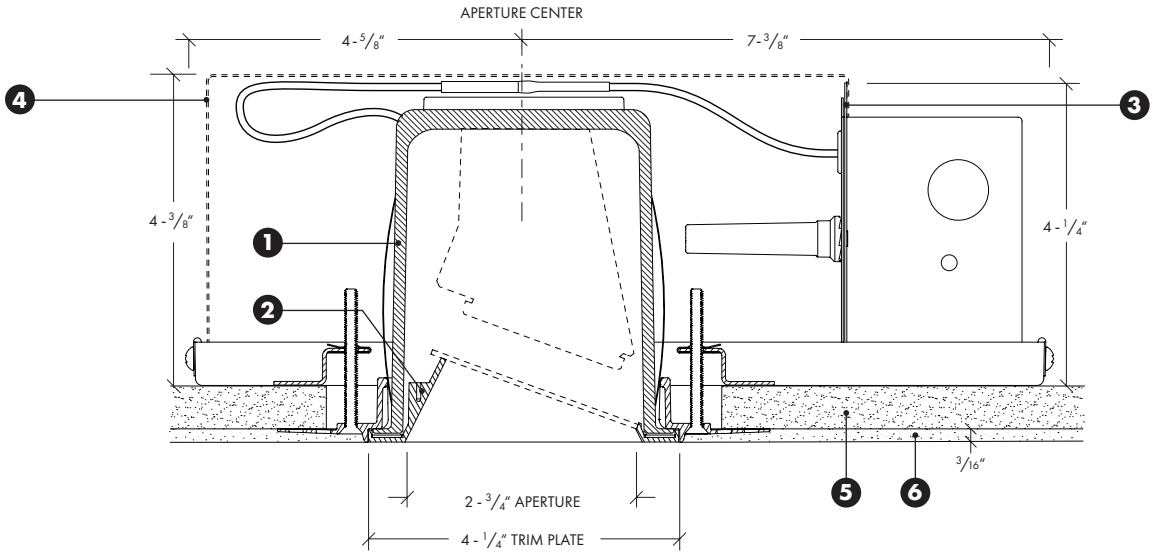


**1) 203-S** Wall Wash SQUARE Light Engine with fixed 20° tilt.

**2) FLS-2-WW** Flanged SQUARE WALL WASH Trim + **F2-S** SQUARE FLANGELESS Trim accessory.

**3) NIC-FS** Type Non-IC housing and power supply for SQUARE Light Engine and FLANGELESS Trim in sheetrock ceiling applications.

**4) IC-CP-2-FS** (shown dashed) Type IC Rated/Air-tight/CCEA approved housing and power supply for SQUARE Light Engine and FLANGELESS Trim in sheetrock ceiling applications.

**5) Ceiling Material** (sheetrock) Accommodates ceiling thicknesses from 1/2" (min) to 1-1/2" (max).

**6) Ceiling Finish** (Drywall Compound or Plaster) Accommodates 3/16" finish thickness. Minimum level 4 or 5 finish recommended.

## **203-S + NIC-FS** and **IC-CP-2-FS** with FLANGELESS TRIM INSTALLATION for SHEETROCK CEILINGS

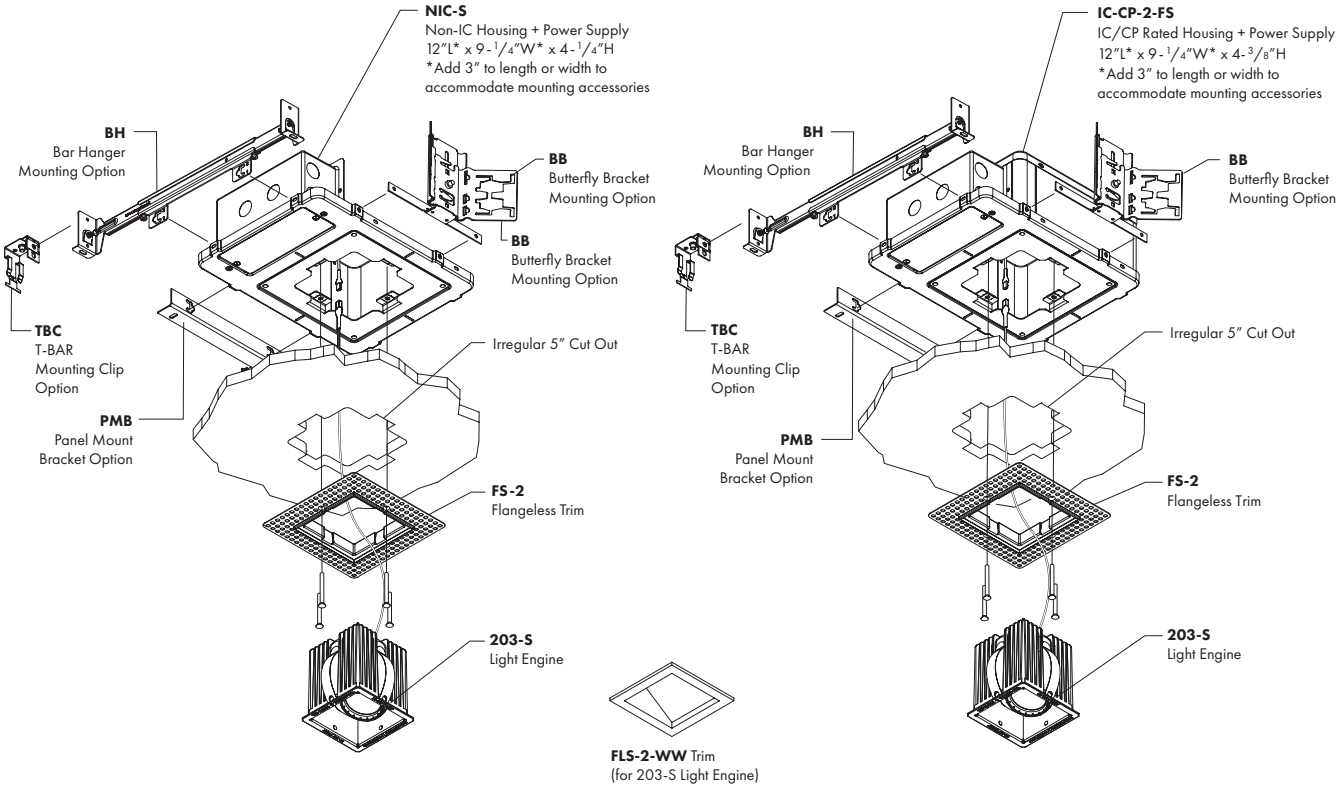


**CEILING TYPES:** Sheetrock | **CEILING THICKNESS:** 1/2" Min to 1-1/2" Max | **CUT-OUT:** 5" Irregular

## **203-S** + **NIC-FS-W** and **IC-CP-2-FS-W** with FLANGELESS TRIM INSTALLATION for WOOD/STONE CEILINGS

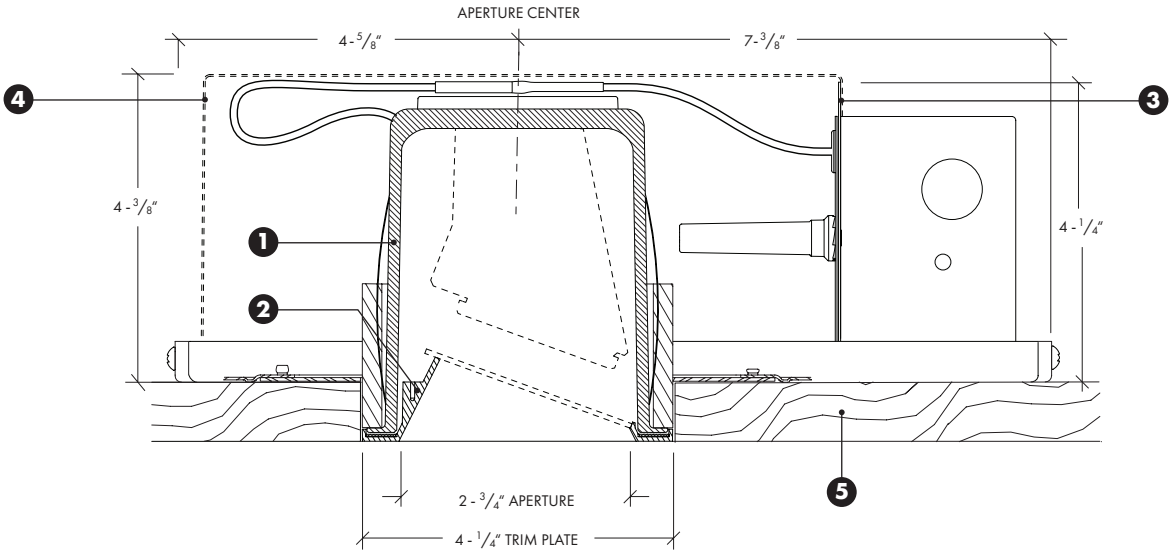


**1) 203-S** Wall Wash SQUARE Light Engine with fixed 20° tilt.

**2) FLS-2-WW** Flanged SQUARE WALL WASH Trim.

**3) NIC-FS-W** Type Non-IC housing and power supply for SQUARE Light Engine and FLANGELESS Trim in wood/stone ceiling applications.

**4) IC-CP-2-FS-W** (shown dashed) Type IC Rated/Air-tight/CCEA approved housing and power supply for SQUARE Light Engine and FLANGELESS Trim in wood/stone ceiling applica-

**5) Ceiling Material** (Wood/Stone) Accommodates ceiling thicknesses from 1/2" (min) to 1-1/2" (max) without affecting aiming or rotation.

## **203-S** + **NIC-FS-W** and **IC-CP-2-FS-W** with FLANGELESS TRIM INSTALLATION for WOOD/STONE CEILINGS

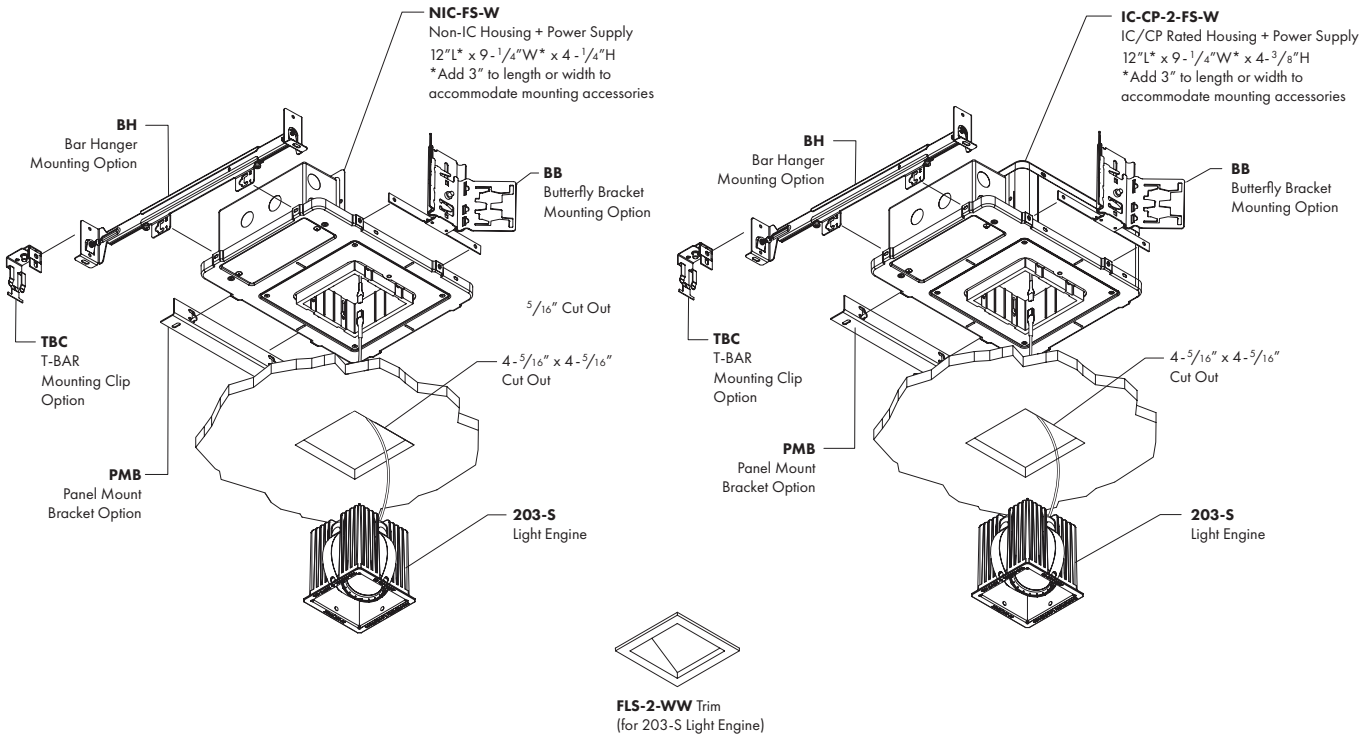


**CEILING TYPES:** Wood/Stone | **CEILING THICKNESS:** 1/2" Min to 1-1/2" Max | **CUT-OUT:** 4-5/16" x 4-5/16"

## **203-S** w/ **FLS-2-WW** TRIM - PERFORMANCE SUMMARY

| LED | CCT | CRI | R9 | Delivered Lumens | System Wattage | Delivered LPW |
|---|---|---|---|---|---|---|
| **HI-27** | 2700K | 93+ | 66 | 949 - 1006 | 13.5 | 71 - 76 |
| **HI-30** | 3000K | 93+ | 68 | 987 - 1046 | 13.5 | 74 - 79 |
| **HI-35** | 3500K | 93+ | 73 | 1010 - 1070 | 13.5 | 76 - 81 |
| **HI-40** | 4000K | 93+ | 70 | 1033 - 1095 | 13.5 | 77 - 83 |
| **WD-5** | 3000-1800K | 92+ | 79 | 866 - 906 | 13.5 | 64 - 67 |
| **WD-6** | 2800-2200K | 92+ | 67 | 836 - 887 | 13.5 | 62 - 66 |
| **WD-7** | 3000-2200K | 92+ | 68 | 896 - 923 | 13.5 | 66 - 69 |

Performance shown for **HI** LED with 40° and 60° optic options.
Performance shown for **WD-5** and **WD-7** LED at 3000K and **WD-6** LED at 2800K with 40° and 60° optic options.

## **203-S-HI-30** w/ **FLS-2-WW** TRIM - FOOTCANDLES ON WALL

| **OPTIC OPTION** | | | **40°** | | | | | | **60°** | | | | | |
|---|---|---|---|---|---|---|---|---|---|---|---|---|---|---|
| **DISTANCE FROM WALL** | | | **2.0 ft** | | | **2.5 ft** | | | **2.0 ft** | | | **2.5 ft** | | |
| **ON CENTER SPACING** | | | | **2.5 ft** | | | **3.0 ft** | | | **2.5 ft** | | | **3.0 ft** | |
| | **DISTANCE FROM CEILING** | 0.5 ft | 0.5 | 0.6 | 0.5 | 0.3 | 0.3 | 0.3 | 0.7 | 0.9 | 0.7 | 0.4 | 0.5 | 0.4 |
| | | 1.5 ft | 20.3 | 20.7 | 20.3 | 6.4 | 6.8 | 6.4 | 25.7 | 27.6 | 25.7 | 9.3 | 10.1 | 9.3 |
| | | 2.5 ft | 43.9 | 47.1 | 43.9 | 24.9 | 26.5 | 24.9 | 44.9 | 49.8 | 44.9 | 28.3 | 31.8 | 28.3 |
| | | 3.5 ft | 36.2 | 40.2 | 36.2 | 28.2 | 31.0 | 28.2 | 31.7 | 35.2 | 31.7 | 27.2 | 30.3 | 27.2 |
| | | 4.5 ft | 24.6 | 27.3 | 24.6 | 22.8 | 25.4 | 22.8 | 20.2 | 22.3 | 20.2 | 19.8 | 22.0 | 19.8 |
| | | 5.5 ft | 16.2 | 17.8 | 16.2 | 16.7 | 18.5 | 16.7 | 13.0 | 14.2 | 13.0 | 13.8 | 15.1 | 13.8 |
| | | 6.5 ft | 10.8 | 11.7 | 10.8 | 12.0 | 13.1 | 12.0 | 8.7 | 9.3 | 8.7 | 9.6 | 10.5 | 9.6 |
| | | 7.5 ft | 7.4 | 7.9 | 7.4 | 8.6 | 9.3 | 8.6 | 6.0 | 6.3 | 6.0 | 6.9 | 7.4 | 6.9 |
| | | 8.5 ft | 5.2 | 5.5 | 5.2 | 6.2 | 6.7 | 6.2 | 4.2 | 4.5 | 4.2 | 5.0 | 5.3 | 5.0 |
| | | 9.5 ft | 3.8 | 4.0 | 3.8 | 4.6 | 4.9 | 4.6 | 3.1 | 3.2 | 3.1 | 3.7 | 3.9 | 3.7 |

Performance shown for 3500K. Output varies by CCT.

## **203-S-WD-5** w/ **FLS-2-WW** TRIM - FOOTCANDLES ON WALL

| **OPTIC OPTION** | | | **40°** | | | | | | **60°** | | | | | |
|---|---|---|---|---|---|---|---|---|---|---|---|---|---|---|
| **DISTANCE FROM WALL** | | | **2.0 ft** | | | **2.5 ft** | | | **2.0 ft** | | | **2.5 ft** | | |
| **ON CENTER SPACING** | | | | **2.5 ft** | | | **3.0 ft** | | | **2.5 ft** | | | **3.0 ft** | |
| | **DISTANCE FROM CEILING** | 0.5 ft | 0.5 | 0.6 | 0.5 | 0.3 | 0.3 | 0.3 | 0.7 | 0.8 | 0.7 | 0.4 | 0.4 | 0.4 |
| | | 1.5 ft | 18.7 | 19.5 | 18.7 | 6.0 | 6.6 | 6.0 | 22.3 | 24.6 | 22.3 | 8.1 | 9.1 | 8.1 |
| | | 2.5 ft | 38.4 | 41.5 | 38.4 | 22.1 | 23.8 | 22.1 | 38.3 | 42.4 | 38.3 | 24.3 | 27.4 | 24.3 |
| | | 3.5 ft | 31.3 | 34.8 | 31.3 | 24.6 | 27.0 | 24.6 | 27.0 | 29.9 | 27.0 | 23.2 | 25.7 | 23.2 |
| | | 4.5 ft | 21.2 | 23.5 | 21.2 | 19.7 | 21.9 | 19.7 | 17.2 | 18.9 | 17.2 | 16.8 | 18.6 | 16.8 |
| | | 5.5 ft | 14.0 | 15.3 | 14.0 | 14.4 | 15.9 | 14.4 | 11.1 | 12.0 | 11.1 | 11.7 | 12.8 | 11.7 |
| | | 6.5 ft | 9.3 | 10.1 | 9.3 | 10.3 | 11.3 | 10.3 | 7.4 | 7.9 | 7.4 | 8.2 | 8.9 | 8.2 |
| | | 7.5 ft | 6.4 | 10.1 | 6.4 | 7.4 | 8.0 | 7.4 | 5.1 | 5.4 | 5.1 | 5.8 | 6.3 | 5.8 |
| | | 8.5 ft | 4.5 | 4.8 | 4.5 | 5.4 | 5.8 | 5.4 | 3.6 | 3.8 | 3.6 | 4.3 | 4.5 | 4.3 |
| | | 9.5 ft | 3.3 | 3.4 | 3.3 | 4.0 | 4.2 | 4.0 | 2.7 | 2.8 | 2.7 | 3.2 | 3.3 | 3.2 |

Performance shown for 3000K. Output varies by CCT.