202-R/202-R-BV NEW CONSTRUCTION ADJUSTABLE LED
FLR-2/FLR-2-BV TRIMS
NON-IC/IC-CP RATED HOUSINGS

Project Name	
Date	Type
Prepared By	
Comments	
Catalog # - - - / / - - - / -	

526 Portal Street
Cotati, CA 94931
USA
P 707.794.0888
www.8lighting.com

All No. 8 Lighting fixtures and components are UL Listed to both U.S. and Canadian requirements. No. 8 Lighting trims and lamp modules are protected by one or more U.S. Patents. No. 8 Lighting reserves the right to change details of design, materials, and finish.

© 2025 No. 8 Lighting

Doc # 91403-13.6

PRODUCT FEATURES

202-R/202-R-BV
ROUND ADJUSTABLE LIGHT ENGINE

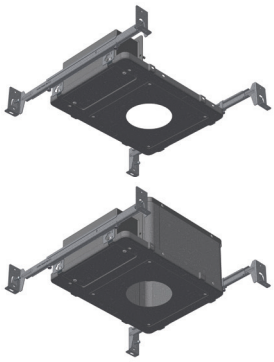

200 SERIES HOUSINGS
TYPE NON-IC or IC-CP-RATED for ROUND TRIMS

200 SERIES TRIMS
FLANGED or FLANGELESS

202-R/202-R-BV SPECIFICATION SUMMARY

	Static White				Warm Dimming		
LED Option	**HI-2700**	**HI-3000**	**HI-3500**	**HI-4000**	**WD**	**WD-2**	**WD-4**
Delivered Lumens	1063	1119	1164	1198	746	724	717
System Wattage	14	14	14	14	15	15	14.5
Efficacy	76	80	83	86	50	48	50
CRI	92+	92+	92+	92+	97+	95+	95
R9	61	57	61	58	81	74	69
CCT	2700K	3000K	3500K	4000K	3000-1800K	2800-2200K	3000-2200K
Color Consistency	2-Step				3-Step		
Optic Options	15, 25, 40, 60				15-NFL, 25-NFL, 40-NFL, 60-NFL		
Optical Accessories	Narrow, Medium, Wide, Extra Wide, Linear Spread				N/A		
Adjustability	0-30° Tilt, 360° Rotation						
Driver Options	<1/5% Forward/Reverse Phase (120v), 0.1/1/5% 0-10v (120-277v), 0.1/1% DALI (120-277v), 0.1/1% EcoSystem (120 or 277v)						
Trim Options	Round Flat, Round Bevel						
Finish Options	White, Oil-Rubbed Bronze, Satin Aluminum, Satin Aluminum w/ White Flange						
Trim Mounting Options	Flanged, Flangeless Sheetrock, Flangeless Wood						
Trim Accessories	UL Wet Listed Lens Options - Clear, Soft Focus						
Housing Options	New Construction: Type Non-IC Air-Tight, Type IC-CP Rated CCEA Approved Air-Tight						

Performance data shown with FLR-2-BV Trim.
Warm Dimming data shown for 3000K and 2800K.
See Performance Summaries for additional information.

PRODUCT SPECIFIER/PRODUCT ORDER NUMBER

LIGHT ENGINE OPTIONS	LED OPTIONS	OPTIC OPTIONS	OPTICAL ACCESSORIES (Optional)*	DRIVER OPTIONS
 202-R Adjustable NEW CONSTRUCTION AIRTIGHT Light Engine with 0-30° tilt and 360° rotation for ROUND FLAT trim **202-R-BV** Adjustable NEW CONSTRUCTION AIRTIGHT Light Engine with 0-30° tilt and 360° rotation for ROUND BEVEL trim	**HI-2700** 2700K 92+ CRI White **HI-3000** 3000K 92+ CRI White **HI-3500** 3500K 92+ CRI White **HI-4000** 4000K 92+ CRI White **WD** 3000-1800K 97+ CRI Warm Dim **WD-2** 2800-2200K 95+ CRI Warm Dim **WD-4** 3000-2200K 95 CRI Warm Dim	**15*** Narrow Spot **25*** Narrow Flood **40*** Flood **60*** Wide Flood **15-NFL-WD**† Spot **25-NFL-WD**† Narrow Flood **40-NFL-WD**† Flood **60-NFL-WD**† Wide Flood *For use with HI LED options. †For use with WD LED options.	**NSP** Narrow Softening Lens **NFL** Medium Softening Lens **FL** Wide Softening Lens **WFL** Extra Wide Softening Lens **LS** Linear Spread Softening Lens *For use with HI LED options.	**PR1-2** Premium Forward or Reverse-Phase <1% Dimming **DIM3-2** Forward or Reverse-Phase 5% Dimming **DIM4-2** 0-10v 5% Dimming **EL1-2** EldoLED 0-10v 1% Dimming **EL1-01-2** EldoLED 0-10v 0.1% Dimming **EL2-2** EldoLED DALI 1% Dimming **EL2-01-2** EldoLED 0.1% DALI Dimming **LU2-2** Lutron Hi-Lume LDE1 EcoSystem 1% Dimming **LU4-2** Lutron Hi-Lume PEQ0E EcoSystem 0.1% Dimming

TRIM OPTIONS	TRIM FINISH	TRIM MOUNTING ACCESSORIES (Optional)	TRIM ACCESSORIES (Optional)	HOUSING OPTIONS	MOUNTING OPTIONS
 FLR-2 4-1/4" ROUND FLAT trim with 1-7/8" aperture **FLR-2-BV** 4-1/4" ROUND BEVEL trim with 2-1/4" aperture	**WH** WHITE **OB*** OIL-RUBBED BRONZE **SA***† SATIN ALUMINUM **SAWH***† SATIN ALUMINUM with WHITE flange *Specialty finish. †Not available with FLAT trim option.	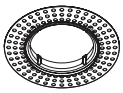 **FR-2*** ROUND FLANGELESS trim accessory for flush mounting FLR-2/FLR-2-BV trims in sheetrock ceiling applications *For use with NIC-FR or IC-CP-FR housing options only.	**CL2*** CLEAR lens **SF2*** SOFT FOCUS lens *UL Wet listed.	**NIC-R** Type Non-IC for ROUND flanged trim applications **NIC-FR*** Type Non-IC for ROUND flangeless trim in sheetrock applications **NIC-FR-W** Type Non-IC for ROUND flangeless trim in wood/stone applications **IC-CP-R** Type IC Chicago Plenum Rated for ROUND flanged trim applications **IC-CP-FR*** Type IC Chicago Plenum Rated for ROUND flangeless trim in sheetrock applications **IC-CP-FR-W** Type IC Chicago Plenum Rated for ROUND flangeless trim in wood/stone applications *Requires FR-2 flangeless trim accessory.	**BH** Bar Hangers for joist mounting **BB** Butterfly Brackets for c-channel or bar mounting **TBC-BH** T-Bar Mounting Clips + Bar Hangers for T-Bar mounting **PMB** Panel Mounting Brackets (set of two) for direct mounting to wood panels

Light Engine, LED, Optic Option, and Accessory Notes

202-R / **202-R-BV** Adjustable NEW CONSTRUCTION light engine with 0-30° tilt and 360° rotation for ROUND FLAT or BEVEL trim. Light engine meets Washington State Airtight Standard WAC 51-11-0502 and in accordance with ASTM E283 to reduce energy loss. Use for adjustable accent and general lighting applications. To ensure fixture to fixture color consistency, use of the same LED option with adjacent fixtures is recommended. One field interchangeable optic option included standard. Up to one additional optical accessory can be accommodated.

Driver and Output Option Notes

0-10v driver options are configured for linear control. DALI driver options are configured for logarithmic control. No.8 Lighting conducts extensive testing to establish compatibility with many dimmer types. For a complete list of compatible dimmers, see 8lighting.com/resources-downloads. Outputs vary depending on LED type, trim type, and optical accessories used. For photometric files in PDF and IES formats, see: 8lighting.com/200-series-photometry.

Trim Finish and Accessory Notes

White trim finish is field paintable to match ceiling color. Lot variations may occur with specialty finishes. Ordering ALL trim kits at the same time is recommended to minimize finish variations. Trim lens accessories are factory installed into trim plates and are UL WET LISTED and rated for use in DRY, DAMP, or WET locations (covered ceiling applications only). Approved for use in residential steam applications. Not for use in commercial steam applications.

Housing and Installation Notes

Type Non-IC housings are rated for installations where insulation is held back a minimum of 3" away from sides and top. Type IC-CP housings are rated for direct contact with standard or spray-foam thermal insulation with a max combined R-Value of R42. Type IC-CP housings meet Washington State Airtight Standard WAC 51-11-0502 and in accordance with ASTM E283 to reduce energy loss and are CCEA plenum rated for City of Chicago environmental air spaces. For installations in direct contact with thermal insulation, ambient temperatures in ceiling space should not exceed 25°C (77°F) during normal operation. For installations where insulation is held back a minimum of 3" from sides and top, ambient temperatures in ceiling space should not exceed 40°C (104°F) during normal operation.

Warranty

All No. 8 Lighting products are covered by a 5 year limited warranty. Products installed in residential steam applications are covered by a 2 year limited warranty. For specific warranty details and limitations, see: 8lighting.com/resources-downloads.

JA8-2025 CA Title 24 Compliant except with Type Non-IC housing options: **NIC-R**, **NIC-FR**, and **NIC-FR-W**.

202-R/202-R-BV + NIC-R and **IC-CP-R** NEW CONSTRUCTION HOUSINGS with FLANGED TRIM INSTALLATION

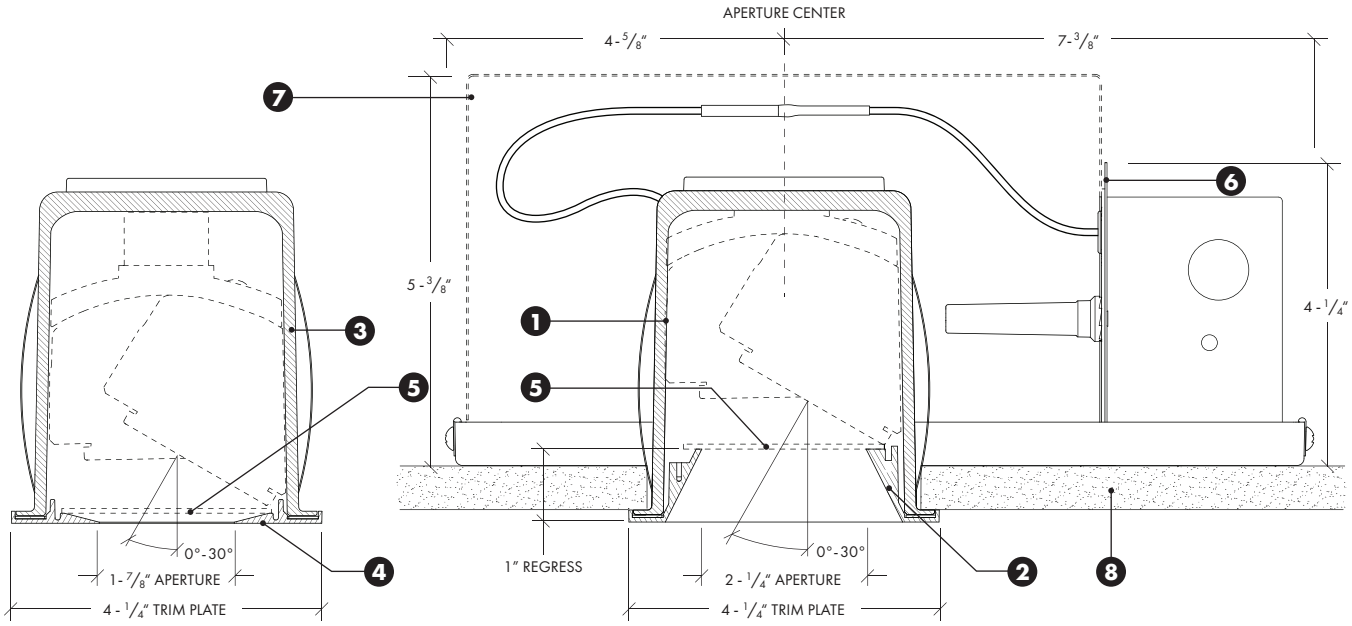

1) 202-R-BV Adjustable ROUND Light Engine for BEVEL trim.
2) FLR-2-BV Flanged ROUND BEVEL Trim.
3) 202-R Adjustable ROUND Light Engine for FLAT trim.
4) FLR-2 Flanged ROUND FLAT Trim.
5) CL2/SF2 (Optional) Clear or Soft Focus lens rated for use in DRY, DAMP, or WET locations (covered ceiling applications only).
6) NIC-R Type Non-IC housing and power supply for ROUND light engine and FLANGED trim installation.
7) IC-CP-R (shown dashed) Type IC Rated/Air-tight/CCEA approved housing and power supply for ROUND light engine and FLANGED trim installation.
8) Ceiling Material (Sheetrock/Wood/Stone/Acoustic Tile) Accommodates ceiling thicknesses from 1/2" (min) to 1-1/2" (max) without affecting aiming or rotation.

202-R/202-R-BV + NIC-R and **IC-CP-R** NEW CONSTRUCTION HOUSINGS with FLANGED TRIM INSTALLATION

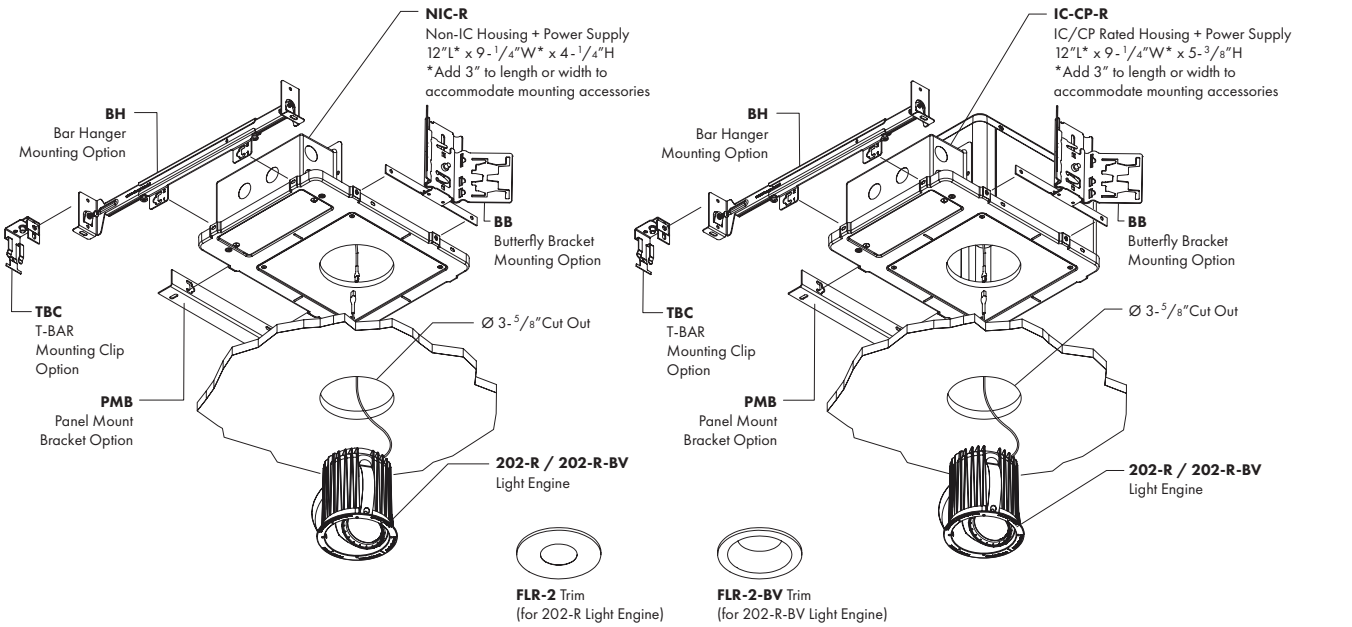

CEILING TYPES: Sheetrock, Wood, Stone & Acoustic Tile | **CEILING THICKNESS:** 1/2" Min to 1-1/2" Max | **CUT-OUT:** Ø 3-3/4"

202-R/202-R-BV + NIC-FR and **IC-CP-FR** with FLANGELESS TRIM INSTALLATION for SHEETROCK CEILINGS

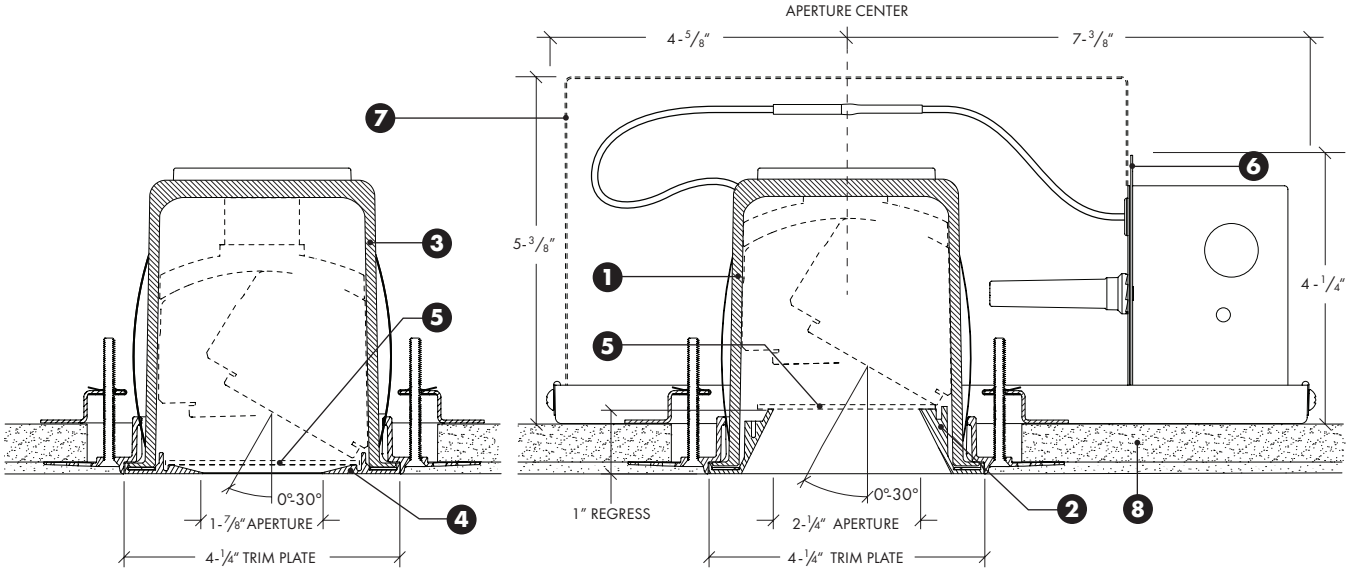

1) 202-R-BV Adjustable ROUND Light Engine for BEVEL trim.
2) FLR-2-BV ROUND BEVEL trim + **FR-2** ROUND FLANGELESS trim accessory.
3) 202-R Adjustable ROUND Light Engine for FLAT trim.
4) FLR-2 ROUND FLAT trim + **FR-2** ROUND FLANGELESS trim accessory.
5) CL2/SF2 (Optional) Clear or Soft Focus lens rated for use in DRY, DAMP, or WET locations (covered ceiling applications only).
6) NIC-FR Type Non-IC housing and power supply for ROUND light engine and FLANGELESS trim in sheetrock ceiling applications.
7) IC-CP-FR (shown dashed) Type IC Rated/Air-tight/CCEA approved housing and power supply for ROUND light engine and FLANGELESS trim in sheetrock ceiling applications.
8) Ceiling Material (Sheetrock) Accommodates ceiling thicknesses from 1/2" (min) to 1-1/2" (max) without affecting aiming or rotation.

202-R/202-R-BV + NIC-FR and **IC-CP-FR** with FLANGELESS TRIM INSTALLATION for SHEETROCK CEILINGS

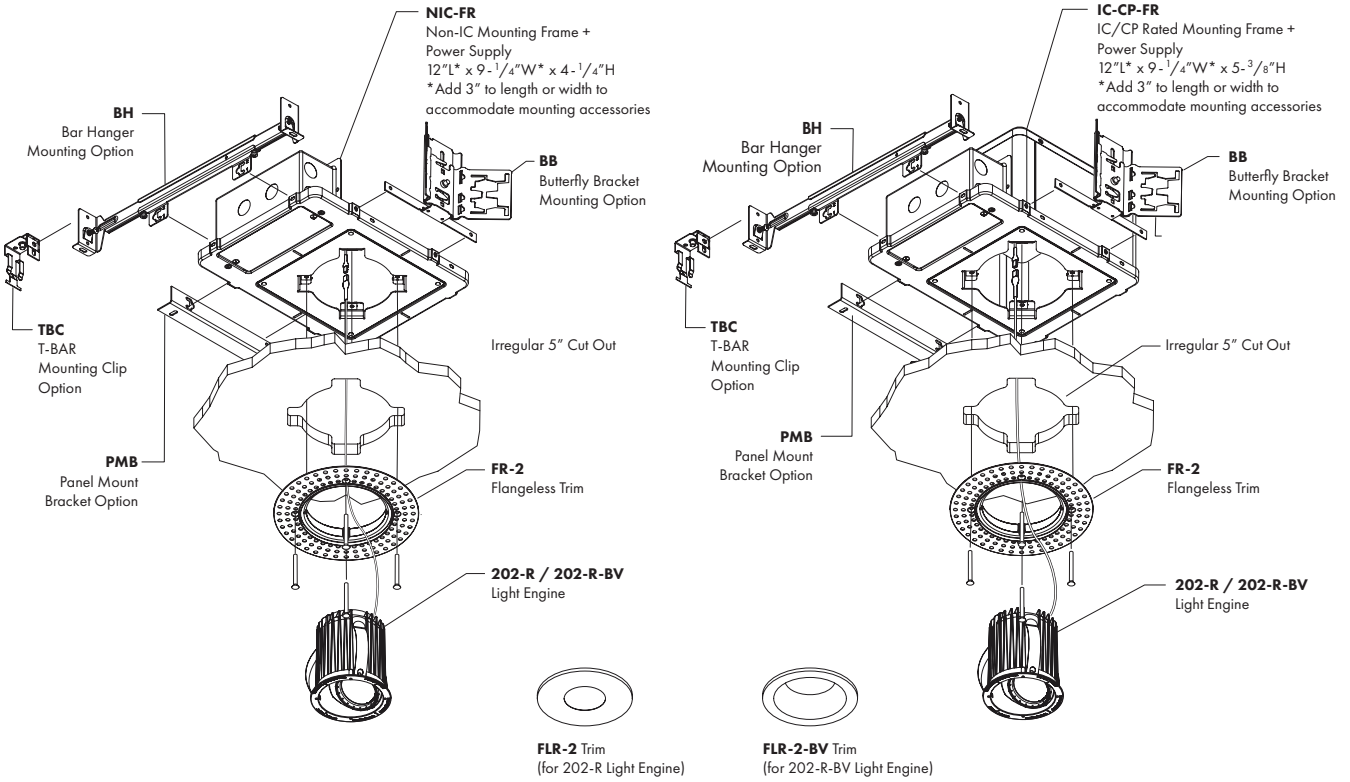

CEILING TYPES: Sheetrock | **CEILING THICKNESS:** 1/2" Min to 1-1/2" Max | **CUT-OUT:** 5" Irregular

202-R/202-R-BV + **NIC-FR-W** and **IC-CP-FR-W** with FLANGELESS TRIM INSTALLATION for WOOD/STONE CEILINGS

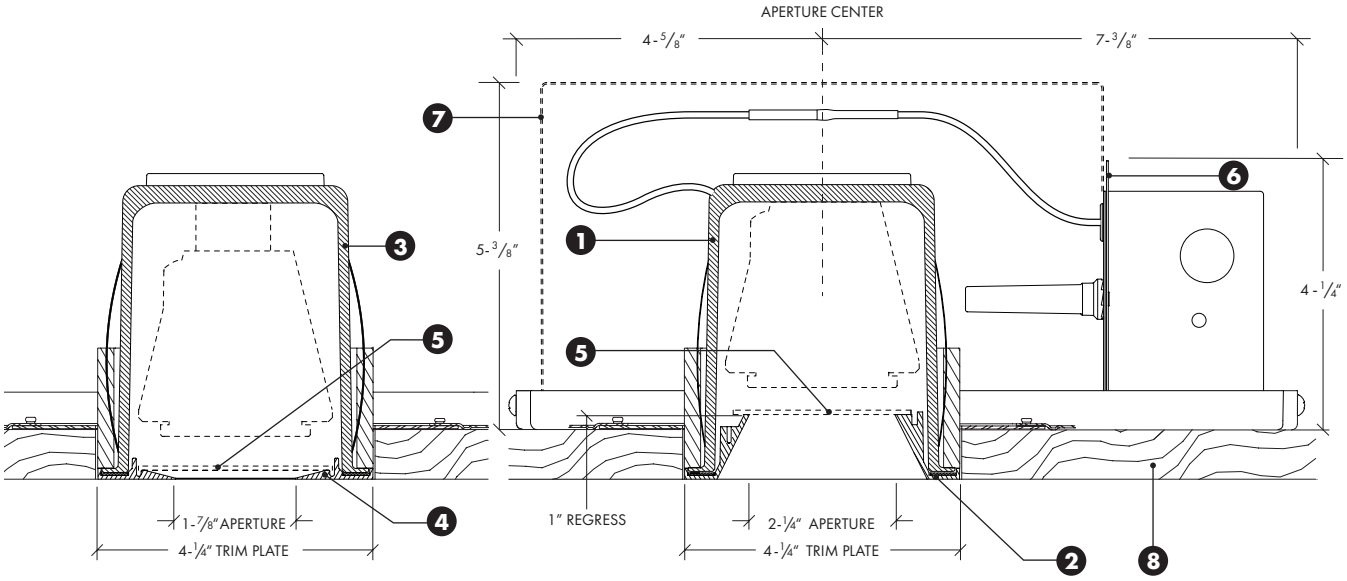

1) 202-R-BV Fixed ROUND Light Engine for BEVEL trim.

2) FLR-2-BV ROUND BEVEL trim.

3) 202-R Adjustable ROUND Light Engine for FLAT trim.

4) FLR-2 ROUND FLAT trim.

5) CL2/SF2 (Optional) Clear or Soft Focus lens rated for use in DRY, DAMP, or WET locations (covered ceiling applications only).

6) NIC-FR-W Type Non-IC housing and power supply for ROUND light engine and FLANGELESS trim in wood/stone ceiling applications.

7) IC-CP-FR-W (shown dashed) Type IC Rated/Air-tight/CCEA approved housing and power supply for ROUND light engine and FLANGELESS trim in wood/stone ceiling applications.

8) Ceiling Material (Wood/Stone) Accommodates ceiling thicknesses from 1/2" (min) to 1-1/2" (max) without effecting aiming or rotation.

202-R/202-R-BV + **NIC-FR-W** and **IC-CP-FR-W** with FLANGELESS TRIM INSTALLATION for WOOD/STONE CEILINGS

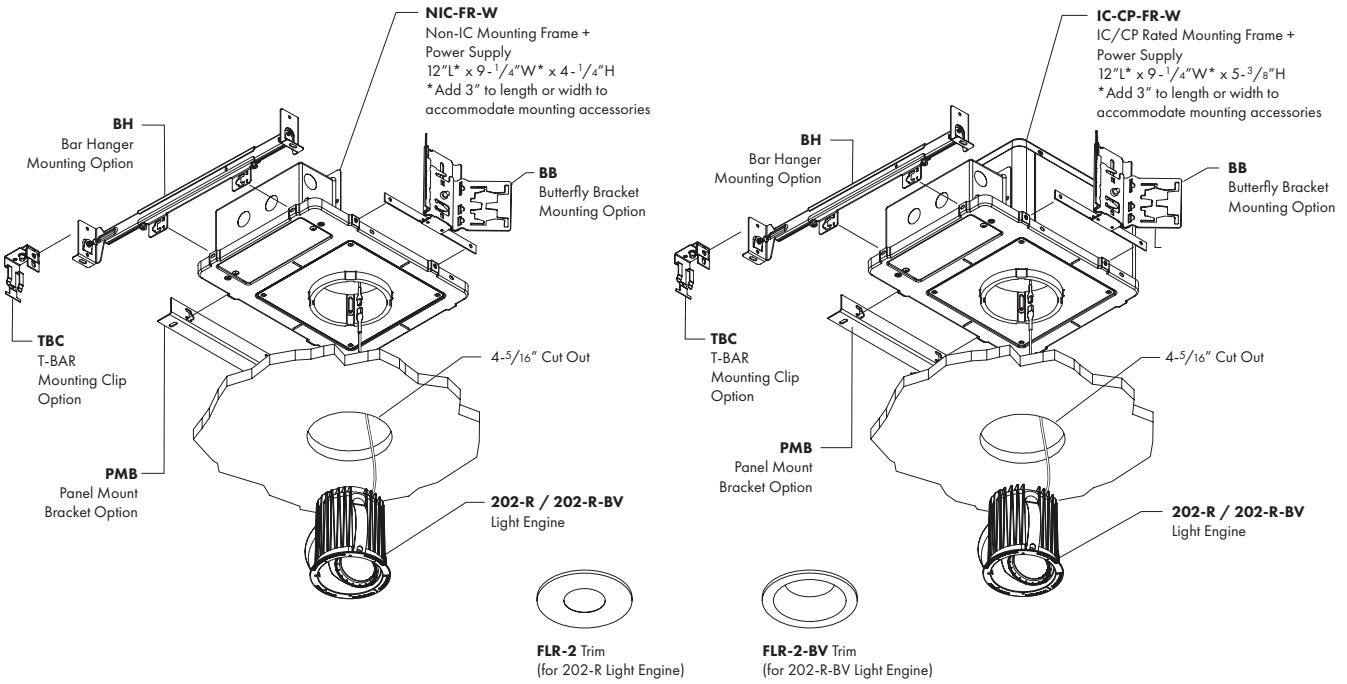

CEILING TYPES: Wood/Stone | **CEILING THICKNESS:** 1/2" Min to 1-1/2" Max | **CUT-OUT:** Ø 4-5/16"

202-R/202-R-BV w/ **FLR-2/FLR-2-BV** TRIM - PERFORMANCE SUMMARY

LED	CCT	CRI	R9	Delivered Lumens	System Wattage	Delivered LPW
HI-2700	2700K	92+	61	785 - 1063	14	56 - 76
HI-3000	3000K	92+	57	826 - 1119	14	59 - 80
HI-3500	3500K	92+	61	859 - 1164	14	61 - 83
HI-4000	4000K	92+	58	884 - 1198	14	63 - 86
WD	3000-1800K	97+	81	523 - 746	15	35 - 50
WD-2	2800-2200K	95+	74	507 - 724	15	34 - 48
WD-4	3000-2200K	95	69	534 - 717	14.5	37 - 50

Performance range for **HI** LED with 15°, 25°, 40°, and 60° optic options.
Performance range for **WD** and **WD-4** LED at 3000K and **WD-2** at 2800K with 15-NFL , 25-NFL, 40-NFL, and 60-NFL optic options.

OPTICAL OPTIONS AND ACCESSORY PERFORMANCE SUMMARY

HI-2700, HI-3000, HI-3500 & HI-4000 LED							**WD, WD-2, & WD-4 LED**	
OPTIC OPTIONS	**BEAM ANGLE**	BEAM ENHANCING LENS (OPTIONAL)*					OPTIC OPTIONS	**BEAM ANGLE**
		+ NSP	**+ NFL**	**+ FL**	**+ WFL**	**+ LS**		
15 Narrow Spot	17°	20°	29°	49°	63°	20 x 47°	**15-NFL-WD** Spot	26°
25 Narrow Flood	27°	29°	36°	57°	71°	28 x 58°	**25-NFL-WD** Narrow Flood	34°
40 Flood	35°	36°	40°	n/a	n/a	n/a	**40-NFL-WD** Flood	40°
60 Wide Flood	54°	55°	57°	n/a	n/a	n/a	**60-NFL-WD** Wide Flood	57°

*Beam enhancing lens used in combination with **HI** LED option and 15°, 25°, 40°, or 60° optic to achieve desired beam spread (**HI** LED only)

202-R-HI/202-R-BV-HI CONE OF LIGHT DIAGRAMS

202-R-HI-3000/FLR-2

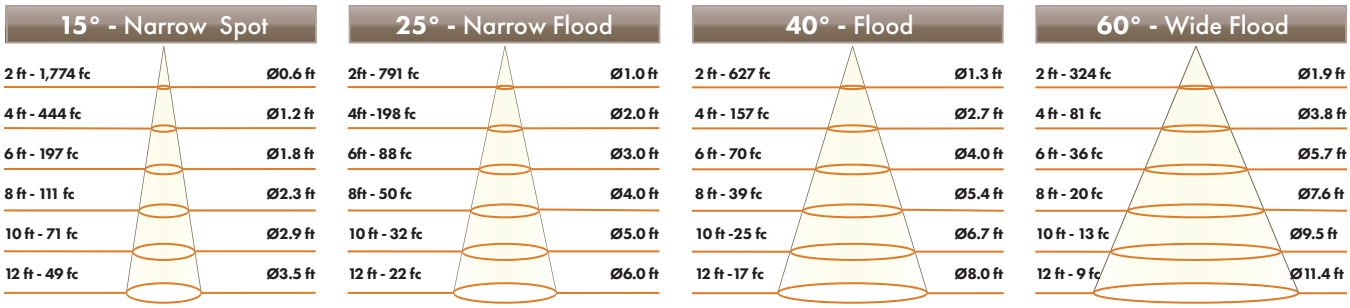

202-R-BV-HI-3000/FLR-2-BV

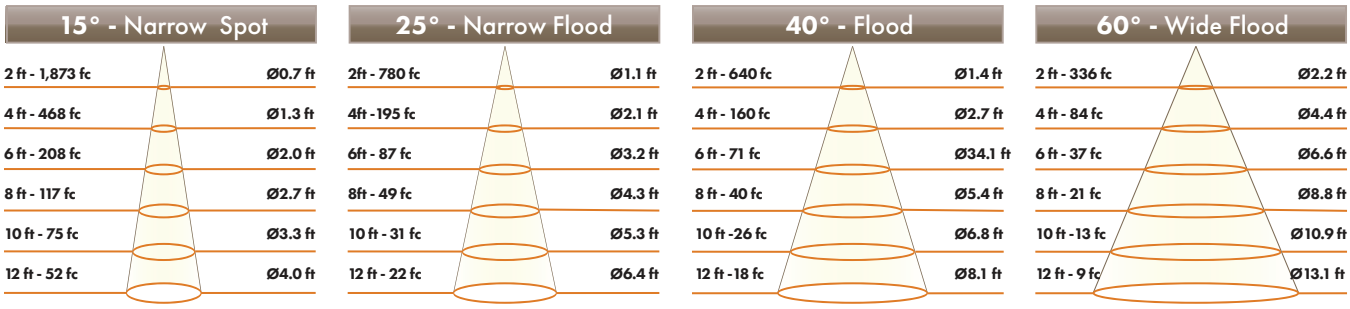

202-R-WD/202-R-BV-WD WARM DIM CONE OF LIGHT DIAGRAMS

202-R-WD/FLR-2

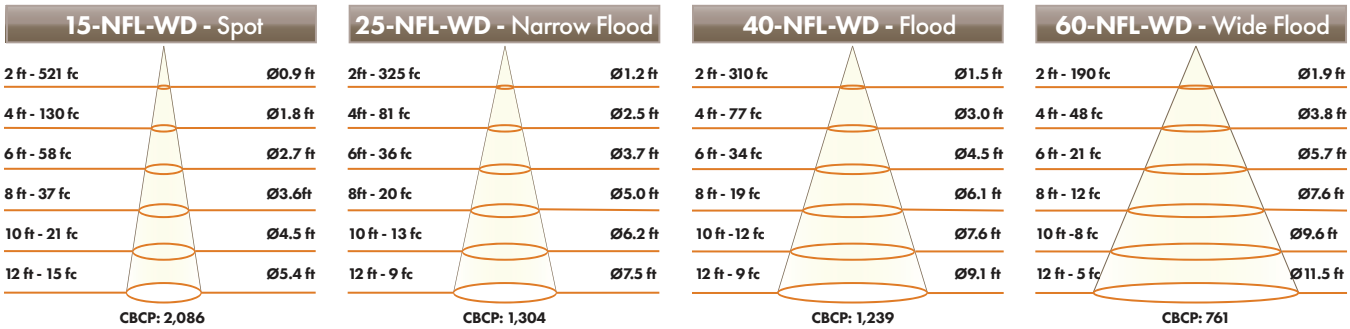

202-R-BV-WD/FLR-2-BV

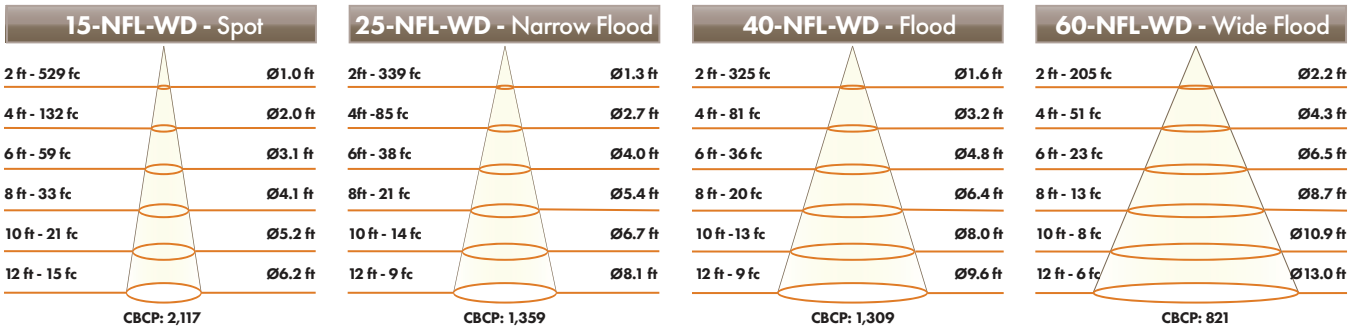

Performance shown for 3000K. Output varies by CCT.