202-R-RM(-RT)/202-R-BV-RM(-RT) REMODEL ADJUSTABLE LED **FLR-2/FLR-2-BV** TRIMS **NON-IC + AIRTIGHT RATED**

Project Name	
Date	Type
Prepared By	
Comments	
Catalog # - - - / - / - - -	

526 Portal Street
Cotati, CA 94931
USA
P 707.794.0888
www.8lighting.com

All No. 8 Lighting fixtures and components are UL Listed to both U.S. and Canadian requirements. No. 8 Lighting trims and lamp modules are protected by one or more U.S. Patents. No. 8 Lighting reserves the right to change details of design, materials, and finish.

© 2025 No. 8 Lighting

Doc # 91409-13.5

PRODUCT FEATURES

202-R-RM/202-R-BV-RM
ROUND ADJUSTABLE LIGHT ENGINE
and INTEGRAL POWER SUPPLY

202-R-RM-RT/202-R-BV-RM-RT
ROUND ADJUSTABLE LIGHT ENGINE
for REMOTE POWER SUPPLY

200 SERIES TRIMS
FLANGED or FLANGELESS

202-R-RM(-RT)/202-R-BV-RM(-RT) SPECIFICATION SUMMARY

	Static White				Warm Dimming		
LED Option	**HI-2700**	**HI-3000**	**HI-3500**	**HI-4000**	**WD**	**WD-2**	**WD-4**
Delivered Lumens	1063	1119	1164	1198	746	724	717
System Wattage	14	14	14	14	15	15	14.5
Efficacy	76	80	83	86	50	48	50
CRI	92+	92+	92+	92+	97+	95+	95
R9	61	57	61	58	81	74	69
CCT	2700K	3000K	3500K	4000K	3000-1800K	2800-2200K	3000-2200K
Color Consistency	2-Step				3-Step		
Optic Options	15, 25, 40, 60				15-NFL, 25-NFL, 40-NFL, 60-NFL		
Optical Accessories	Narrow, Medium, Wide, Extra Wide, Linear Spread				N/A		
Adjustability	0-30° Tilt, 360° Rotation						
Driver Options	INTEGRAL: <1/5% Forward/Reverse Phase (120v), 0.1/1/5% 0-10v (120-277v), 0.1/1% DALI (120-277v), 0.1/1% EcoSystem (120 or 277v) REMOTE: <1% Forward/Reverse Phase (120v), 0.1/1% 0-10v (120-277v), 0.1/1% DALI (120-277v), 0.1% EcoSystem (120 or 277v)						
Trim Options	Round Flat, Round Bevel						
Finish Options	White, Oil-Rubbed Bronze, Satin Aluminum, Satin Aluminum w/ White Flange						
Trim Mounting Options	Flanged, Flangeless Sheetrock						
Trim Accessories	UL Wet Listed Lens Options - Clear, Soft Focus						
Mounting Options	Remodel: Type Non-IC Air-Tight						

Performance data shown with FLR-2-BV Trim.
Warm Dimming data shown for 3000K and 2800K.
See Performance Summaries for additional information.

PRODUCT SPECIFIER/PRODUCT ORDER NUMBER

LIGHT ENGINE + POWER SUPPLY OPTIONS - LED OPTIONS - OPTIC OPTIONS - OPTICAL ACCESSORIES (Optional)* / DRIVER OPTIONS - REMOTE OPTIONS* /

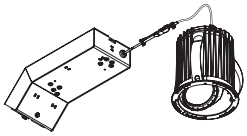

202-R-RM*
Adjustable REMODEL Light Engine + INTEGRAL Power Supply for ROUND FLAT trim

202-R-BV-RM*
Adjustable REMODEL Light Engine + INTEGRAL Power Supply for ROUND BEVEL trim

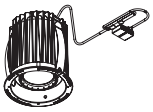

202-R-RM-RT*
Adjustable REMODEL Light Engine for REMOTE Power Supply and ROUND FLAT trim

202-R-BV-RM-RT*
Adjustable REMODEL Light Engine for REMOTE Power Supply and ROUND BEVEL trim

*AIRTIGHT and Type Non-IC Rated for installations where insulation can be held back 3" from sides and top. Adjustment range: 0-30° tilt and 360° rotation.

HI-2700
2700K 92+ CRI White

HI-3000
3000K 92+ CRI White

HI-3500
3500K 92+ CRI White

HI-4000
4000K 92+ CRI White

WD
3000-1800K 97+ CRI Warm Dim

WD-2
2800-2200K 95+ CRI Warm Dim

WD-4
3000-2200K 95 CRI Warm Dim

15*
Narrow Spot

25*
Narrow Flood

40*
Flood

60*
Wide Flood

15-NFL-WD†
Spot

25-NFL-WD†
Narrow Flood

40-NFL-WD†
Flood

60-NFL-WD†
Wide Flood

*For use with HI LED option.

†For use with WD LED options.

NSP
Narrow Softening Lens

NFL
Medium Softening Lens

FL
Wide Softening Lens

WFL
Extra Wide Softening Lens

LS
Linear Spread Lens

*For use with HI LED option.

PR1-2-R
Premium Forward or Reverse-Phase <1% Dimming

DIM3-2-R*
Forward or Reverse-Phase 5% Dimming

DIM4-2-R*
0-0-10v 1% Dimming

EL1-2-R
EldoLED 0-10v 1% Dimming

EL1-01-2-R
EldoLED 0-10v 0.1% Dimming

EL2-2-R
EldoLED DALI 1% Dimming

EL2-01-2-R
EldoLED 0.1% DALI Dimming

LU2-2-R*
Lutron Hi-Lume LDE1 EcoSystem 1% Dimming

LU4-2-R
Lutron Hi-Lume PEQ0E EcoSystem 0.1% Dimming

*Not available with remote option.

RT
REMOTE Mounted Power Supply for PR1 Driver Option

RT-1L
REMOTE Mounted Power Supply for EL1, EL1-01, EL2, EL2-01, or LU4 Driver Options

*For use with 202-R-RM-RT or 202-R-BV-RM-RT Light Engines only. Leave blank for integral dimming options.

TRIM OPTIONS - TRIM FINISH - TRIM MOUNTING ACCESSORIES (Optional) - TRIM ACCESSORIES (Optional)

FLR-2
4-1/4" ROUND FLAT trim with 1-7/8" aperture

FLR-2-BV
4-1/4" ROUND BEVEL trim with 2-1/4" aperture

WH
WHITE

OB*
OIL-RUBBED BRONZE

SA*†
SATIN ALUMINUM

SAWH*†
SATIN ALUMINUM with WHITE flange

*Specialty finish.

†Not available with FLAT trim option.

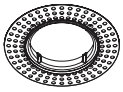

FR-2-RM
ROUND FLANGELESS trim accessory for flush mounting FLR-2/FLR-2-BV trims in sheetrock ceiling applications in REMODEL installations

CL2*
CLEAR lens

SF2*
SOFT FOCUS lens

*UL Wet listed.

Maximum REMOTE Driver-to-LED Light Engine Wire Length		
Driver Model		Wire Gauge
PR1-2-R-RT	EL1/EL1-01/EL2/EL2-01/LU4-2-R-RT-1L	
8 ft (2.5 m)		24 AWG (0.2 mm²)
13 ft (4 m)		22 AWG (0.34 mm²)
20 ft (6 m)		20 AWG (0.5 mm²)
30 ft (9 m)		18 AWG (.75 mm²)
35 ft (10.5 m)		16 AWG (1.5 mm²)
50 ft (15 m)		14 AWG (2.5 mm²)
100 ft (30 m)		12 AWG (4.0 mm²)
Wire Type: Stranded Class 2 wire (supplied by others)		

Light Engine, LED, Optic Option, and Accessory Notes

202-R-RM(-RT)/202-R-BV-RM(-RT) Adjustable airtight REMODEL light engine with 0-30° tilt and 360° rotation for ROUND FLAT/BEVEL trim. Use for adjustable accent and general lighting applications. **202-R-RM/202-R-BV-RM** for use with INTEGRAL power supply and **202-R-RM-RT/202-R-BV-RM-RT** for use with REMOTE mounted power supply. To ensure fixture to fixture color consistency, use of the same LED option with adjacent fixtures is recommended. One field interchangeable optic option included standard. Up to one additional optical accessory can be accommodated.

Installation Notes

Accommodates sheetrock/wood/stone (tile) ceilings with thicknesses ranging from 1/2" (min) - 1-1/2" (max). Requires 5-1/2" (min) ceiling space above finished ceiling. Type Non-IC rated for installations where insulation is held back a minimum of 3" away from sides and top. Meets Washington State Airtight Standard WAC 51-11-0502 and in accordance with ASTM E283 to reduce energy loss. Ambient temperatures in ceiling space should not exceed 40°C (104°F) during normal operation.

Driver and Output Option Notes

0-10v driver options are configured for linear control. DALI driver options are configured for logarithmic control. No.8 Lighting conducts extensive testing to establish compatibility with many dimmer types. For a complete list of compatible dimmers, see 8lighting.com/resources-downloads. Outputs vary depending on LED type, trim type, and optical accessories used. For photometric files in PDF and IES formats, see: 8lighting.com/200-series-photometry.

Trim Finish and Accessory Notes

White trim finish is field paintable to match ceiling color. Lot variations may occur with specialty finishes. Ordering ALL trim kits at the same time is recommended to minimize finish variations. Trim lens accessories are factory installed into trim plates and are UL WET LISTED and rated for use in DRY, DAMP, or WET locations (covered ceiling applications only). Approved for use in residential steam applications. Not for use in commercial steam applications.

Warranty

All No. 8 Lighting products are covered by a 5 year limited warranty. Products installed in residential steam applications are covered by a 2 year limited warranty. For specific warranty details and limitations, see: 8lighting.com/resources-downloads.

202-R-RM(-RT)/202-R-BV-RM(-RT) REMODEL FIXTURE ASSEMBLY with FLANGED TRIM INSTALLATION

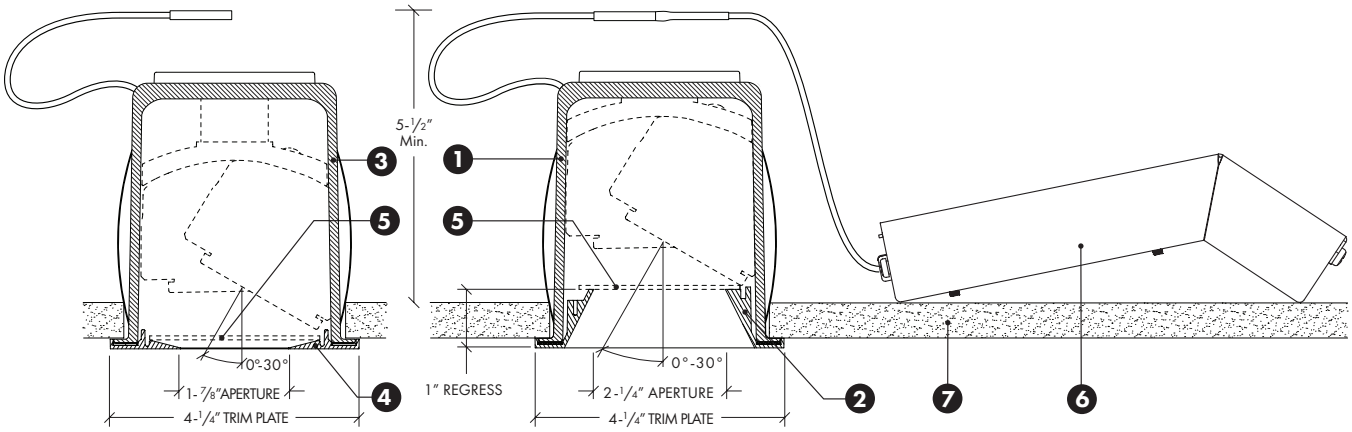

1) 202-R-BV-RM /202-R-BV-RM-RT Adjustable ROUND Light Engine for BEVEL trim.

2) FLR-2-BV Flanged ROUND BEVEL Trim.

3) 202-R-RM/202-R-RM-RT Adjustable ROUND Light Engine for FLAT trim.

4) FLR-2 Flanged ROUND FLAT Trim.

5) CL2/SF2 (Optional) Clear or Soft Focus lens rated for use in DRY, DAMP, or WET locations (covered ceiling applications only).

6) Integral Power Supply/Junction Box (shown) Installs from below finished ceiling and is accessible after installation. Requires 5-1/2" (Min.) clearance above ceiling for installation. **RT/RT-1L Remote Power Supply/Junction Box** (not shown) can be mounted up to 100ft from fixture using 12AWG Class 2 stranded wire. See wire length table on Page 2.

7) Ceiling Material (Sheetrock/Wood/Stone) Accommodates ceiling thicknesses from 1/2" (min) to 1-1/2" (max) without affecting aiming or rotation.

202-R-RM(-RT)/202-R-BV-RM(-RT) REMODEL FIXTURE ASSEMBLY with FLANGED TRIM INSTALLATION

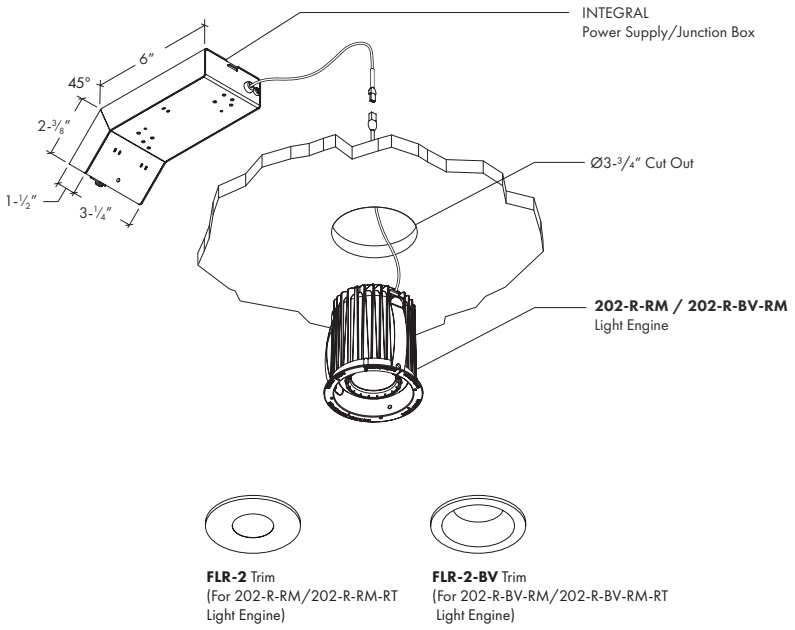

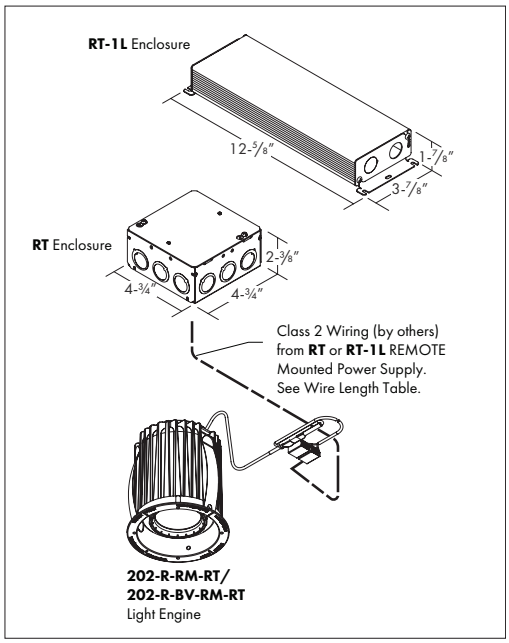

CEILING TYPES: Sheetrock, Wood & Stone | **CEILING THICKNESS:** 1/2" Min to 1-1/2" Max | **CUT-OUT:** Ø 3-3/4"

202-R-RM(-RT)/202-R-BV-RM(-RT) REMODEL FIXTURE ASSEMBLY with **FR-2-RM** FLANGELESS TRIM INSTALLATION

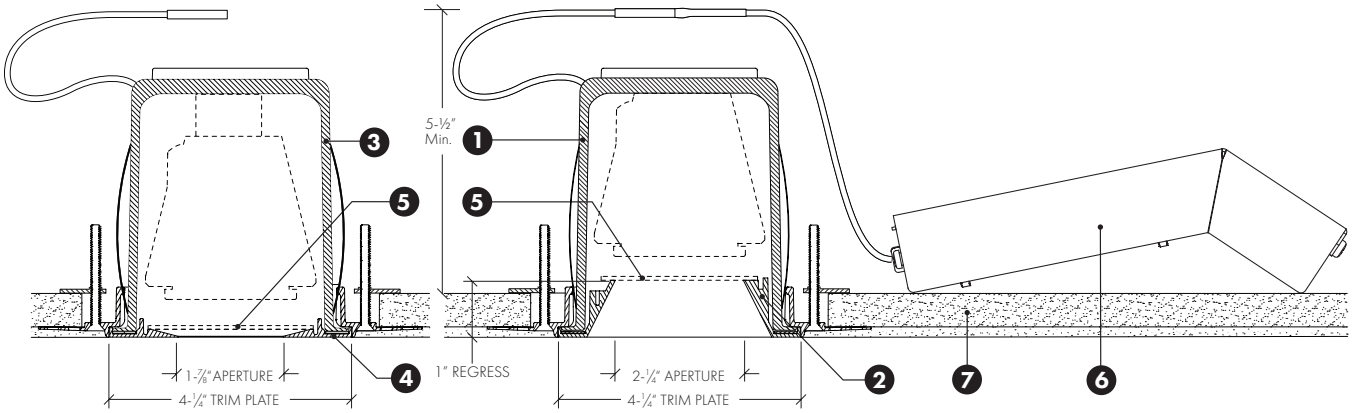

1) 202-R-BV-RM/202-R-BV-RM-RT Adjustable ROUND Light Engine for BEVEL trim.

2) FLR-2-BV Flanged ROUND BEVEL Trim + **FR-2-RM** ROUND FLANGELESS trim accessory.

3) 202-R-RM/202-R-RM-RT Adjustable ROUND Light Engine for FLAT trim.

4) FLR-2 Flanged ROUND FLAT Trim + **FR-2-RM** ROUND FLANGELESS trim accessory.

5) CL2/SF2 (Optional) Clear or Soft Focus lens rated for use in DRY, DAMP, or WET locations (covered ceiling applications only).

6) Integral Power Supply/Junction Box (shown) Installs from below finished ceiling and is accessible after installation. Requires 5-1/2" (Min.) clearance above ceiling for installation. **RT/RT-1L Remote Power Supply/Junction Box** (not shown) can be mounted up to 100ft from fixture using 12AWG Class 2 stranded wire. See wire length table on Page 2.

7) Ceiling Material (Sheetrock) Accommodates ceiling thicknesses from 1/2" (min) to 1-1/2" (max) without affecting aiming or rotation.

202-R-RM(-RT)/202-R-BV-RM(-RT) REMODEL FIXTURE ASSEMBLY with **FR-2-RM** FLANGELESS TRIM INSTALLATION

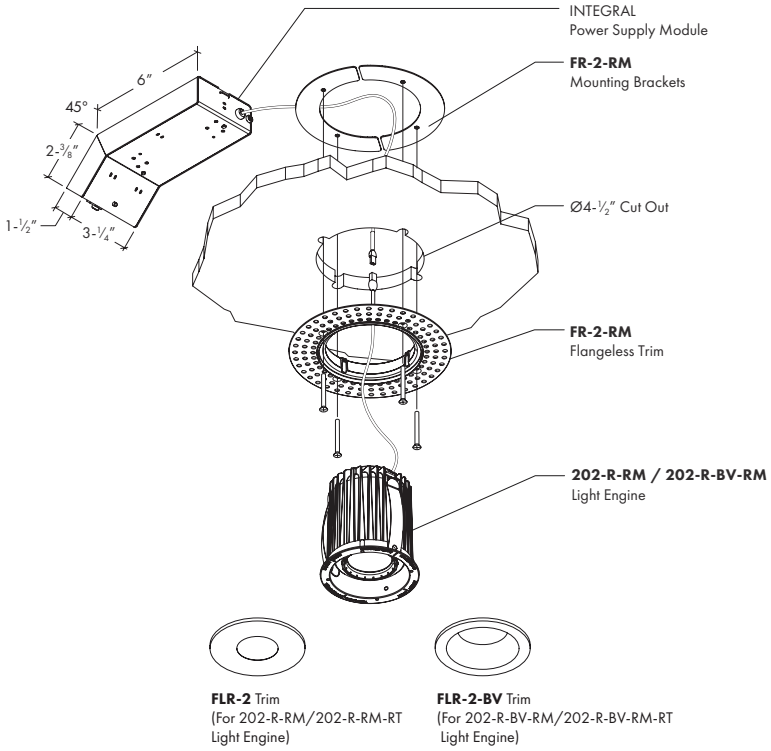

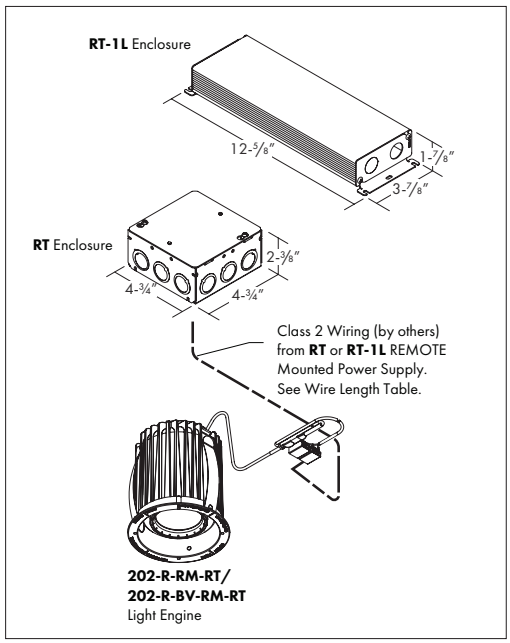

CEILING TYPES: Sheetrock | **CEILING THICKNESS:** 1/2" Min to 1-1/2" Max | **CUT-OUT:** Ø 4-1/2"

202-R-RM/202-R-BV-RM w/ **FLR-2/FLR-2-BV** TRIM - PERFORMANCE SUMMARY

LED	CCT	CRI	R9	Delivered Lumens	System Wattage	Delivered LPW
HI-2700	2700K	92+	61	785 - 1063	14	56 - 76
HI-3000	3000K	92+	57	826 - 1119	14	59 - 80
HI-3500	3500K	92+	61	859 - 1164	14	61 - 83
HI-4000	4000K	92+	58	884 - 1198	14	63 - 86
WD	3000-1800K	97+	81	523 - 746	15	35 - 50
WD-2	2800-2200K	95+	74	507 - 724	15	34 - 48
WD-4	3000-2200K	95	69	534 - 717	14.5	37 - 50

Performance range for **HI** LED with 15°, 25°, 40°, and 60° optic options.
Performance range for **WD** and **WD-4** LED at 3000K and **WD-2** LED at 2800K with 15-NFL, 25-NFL, 40-NFL, and 60-NFL optic options.

OPTICAL OPTIONS AND ACCESSORY PERFORMANCE SUMMARY

HI-2700, HI-3000, HI-3500 & HI-4000 LED							**WD, WD-2, & WD-4 LED**	
OPTIC OPTIONS	**BEAM ANGLE**	BEAM ENHANCING LENS (OPTIONAL)*					OPTIC OPTIONS	**BEAM ANGLE**
		+ NSP	**+ NFL**	**+ FL**	**+ WFL**	**+ LS**		
15 Narrow Spot	17°	20°	29°	49°	63°	20 x 47°	**15-NFL-WD** Spot	26°
25 Narrow Flood	27°	29°	36°	57°	71°	28 x 58°	**25-NFL-WD** Narrow Flood	34°
40 Flood	35°	36°	40°	n/a	n/a	n/a	**40-NFL-WD** Flood	40°
60 Wide Flood	54°	55°	57°	n/a	n/a	n/a	**60-NFL-WD** Wide Flood	57°

*Beam enhancing lens used in combination with **HI** LED option and 15°, 25°, 40°, or 60° optic to achieve desired beam spread (**HI** LED only)

202-R-RM-HI/202-R-BV-RM-HI CONE OF LIGHT DIAGRAMS

202-R-RM-HI-3000/FLR-2

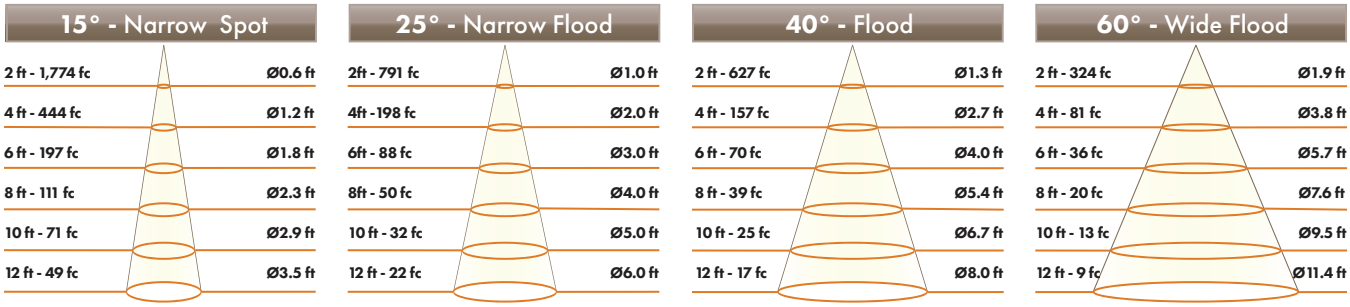

202-R-BV-RM-HI-3000/FLR-2-BV

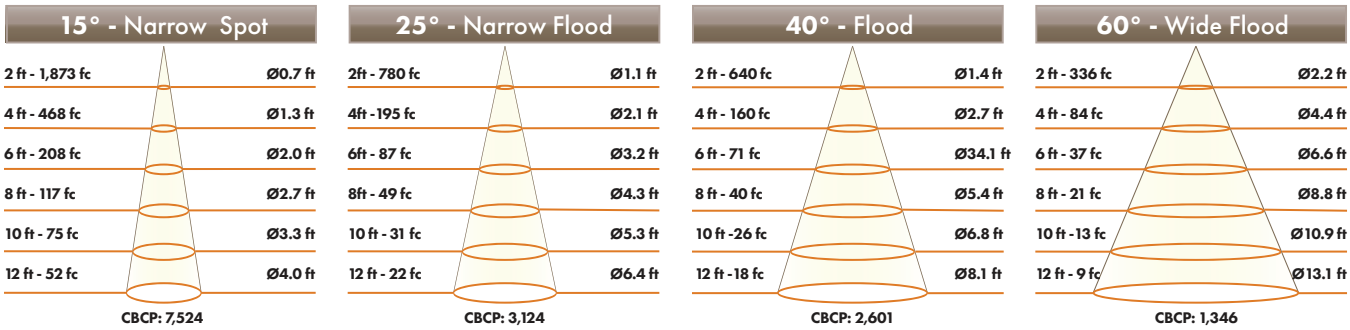

202-R-RM-WD/202-R-BV-RM-WD WARM DIM CONE OF LIGHT DIAGRAMS

202-R-RM-WD/FLR-2

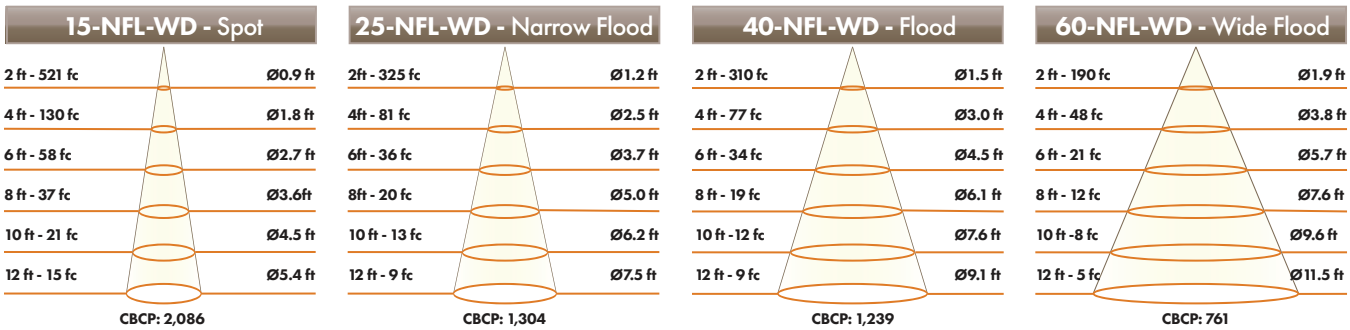

202-R-BV-RM-WD/FLR-2-BV

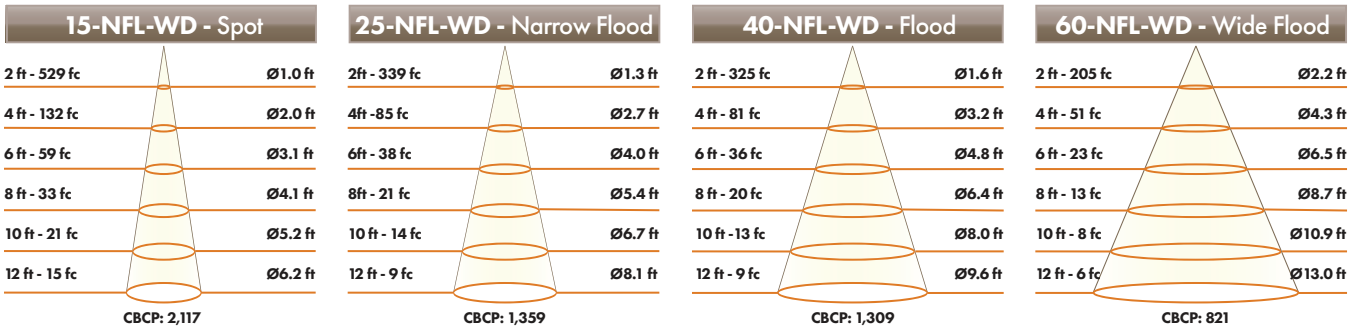

Performance shown for 3000K. Output varies by CCT.