LED Lamp Module Instructions 11512-1 Rev A

Recessed Housing Model Series 801, 802 & 803

Lamp Module J2 Installation / Removal / Adjustment

CAUTION: ▶Turn off power at wall switch & review all instructions on this page before proceeding.
▶Always allow lamp module to cool before servicing.

Installation (not required if pre-installed into housing**):**

Step 1 Before installing Lamp Module, make sure correct LED Power Supply Module is installed & Lock Shaft is in unlocked position - FIG 1.1.
Step 2 Insert Lamp Module into housing as shown then adjust to 45° position to expose Bolt. Secure to Housing Center Nut - FIG 1.2 & 1.3.
Step 4 Plug Wire Connector from Lamp Module into Power Supply Module connector. Push wire up inside housing to avoid interference during adjustment - FIG 1.2.
Adjustment: Adjust desired horizontal position & vertical aiming angle as shown in FIG 1.4.
Removal : **To remove lamp module follow steps above in reverse order.**
Replacement: Contact Number Eight Lighting for replacement Lamp Module or LED emitter.
Optional Accessories: Unscrew Lamp Ring to add/ remove accessories - FIG 1.2.

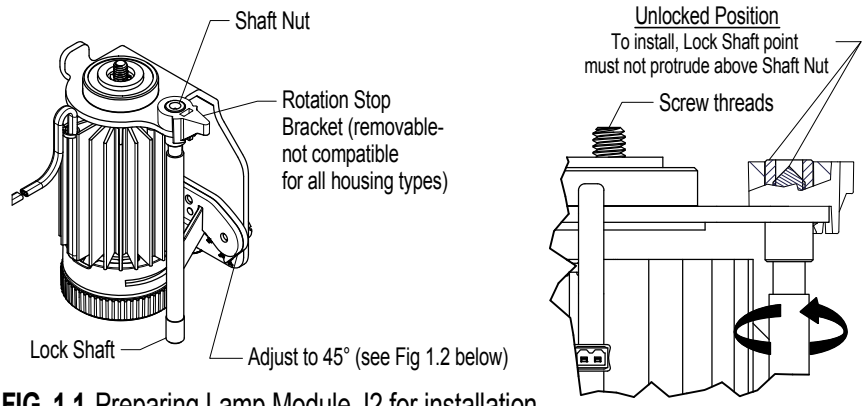

FIG. 1.1 Preparing Lamp Module J2 for installation

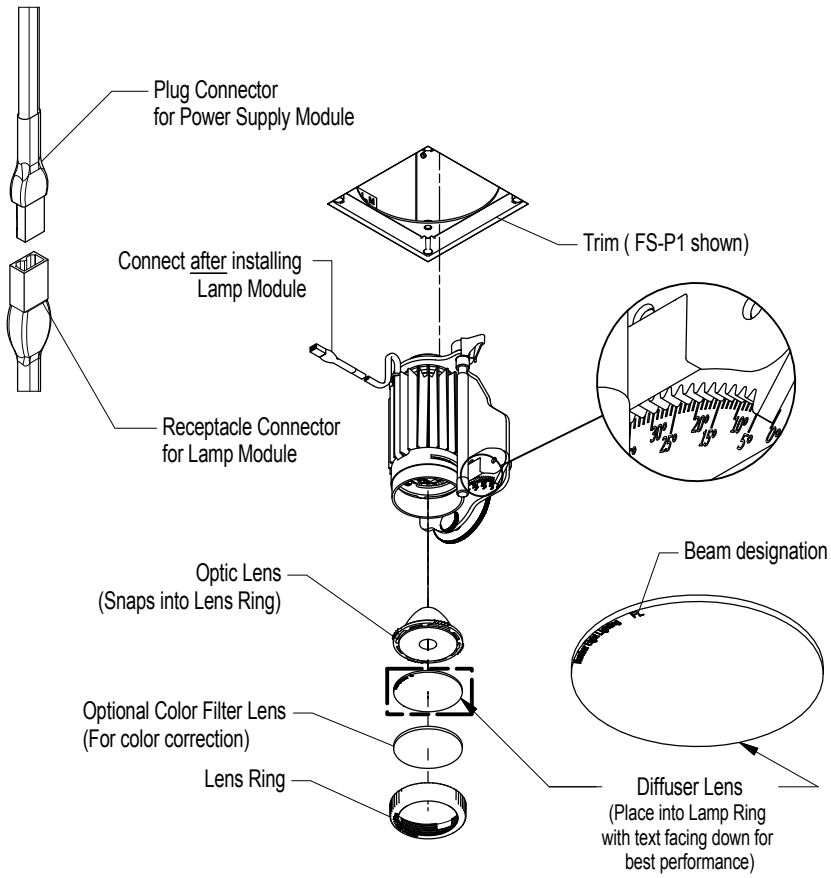

FIG 1.2 Installing Lamp Module J2

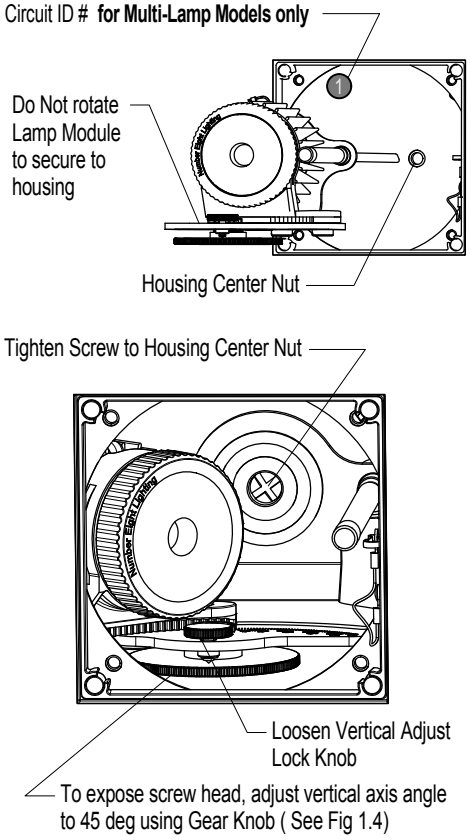

FIG. 1.3 Securing Lamp Module to Housing

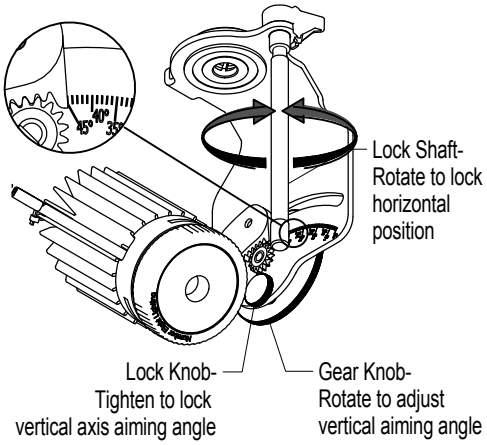

FIG 1.4 Aiming Adjustment

CAUTION:
- ▶Turn off power at wall switch & review all instructions on this page before proceeding.
- ▶Always allow lamp module to cool before servicing.

Installation (not required if pre-installed into housing):

Step 1 Before installing Lamp Module, make sure the LED Power Supply Module is installed (shown on page 5).
Step 2 Pull Power Module Connector through opening & insert Lamp Module into housing as shown. Secure threaded stud to Housing Center Nut & hand tighten - Fig 2.1 & 2.2.
Step 3 Plug Wire Connector from Lamp Module into Power Supply Module connector. Push wire up inside housing to avoid interference with LED - Fig 2.2.
Step 4 Install Trim Plate into Trim.
Removal: To remove lamp module follow steps above in reverse order.
Replacement: Contact Number Eight Lighting for replacement Lamp Module or LED emitter.
Optional Accessories: Unscrew Lamp Ring to add/remove accessories- Fig 2.1.

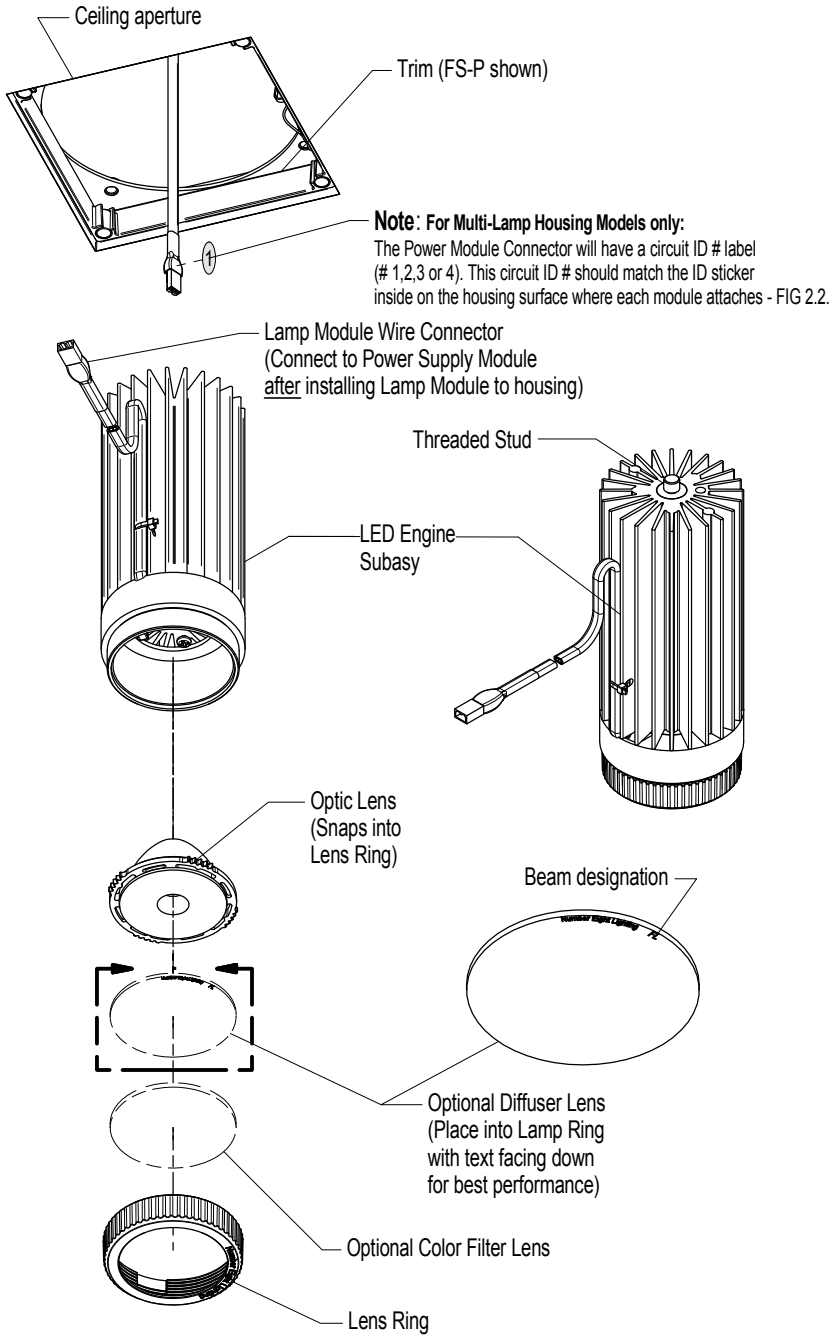

FIG 2.1 Installing Lamp Module K2 & Accessories

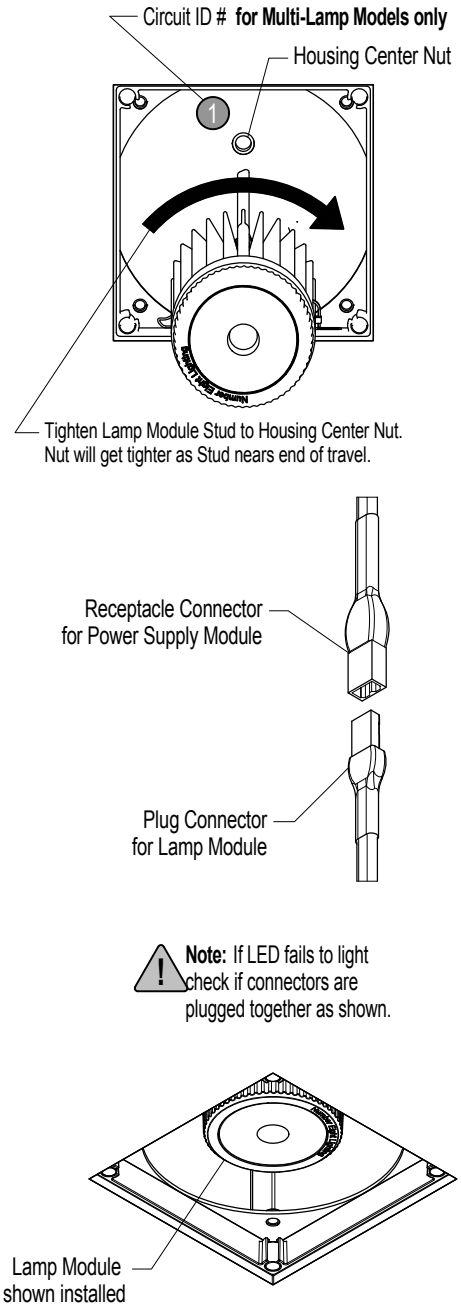

FIG. 2.2 Securing Lamp Module K2 to Housing

Lamp Module L2-Installation / Removal 11512-3 Rev A

CAUTION: ⚠

- ▶Turn off power at wall switch & review all instructions on this page before proceeding.
- ▶Always allow lamp module to cool before servicing.

Installation (not required if pre-installed into housing)**:**

Step 1 Before installing Lamp Module, make sure correct LED Power Supply Module is installed.

Step 2 Plug Wire Connector from Lamp Module into Power Supply Module Connector. Push wire up inside housing to avoid interference during installation - FIG 3.2.

Step 3 Choose aiming position & push both Spring Arms up to insert Lamp Module through Housing aperature. Release arms inside Housing & seat Trim Plate into Trim as shown - FIG 3.2.

Removal: To remove Lamp Module follow steps above in reverse order.

Replacement: Contact Number Eight Lighting for replacement LED Engine Subasy or LED emitter. Remove Lamp Module & unscrew LED Engine Subasy for replacement or to access LED emitter.

Optional Accessories: Unscrew LED Engine Subasy to add/ remove Lens accessories - FIG 3.1.

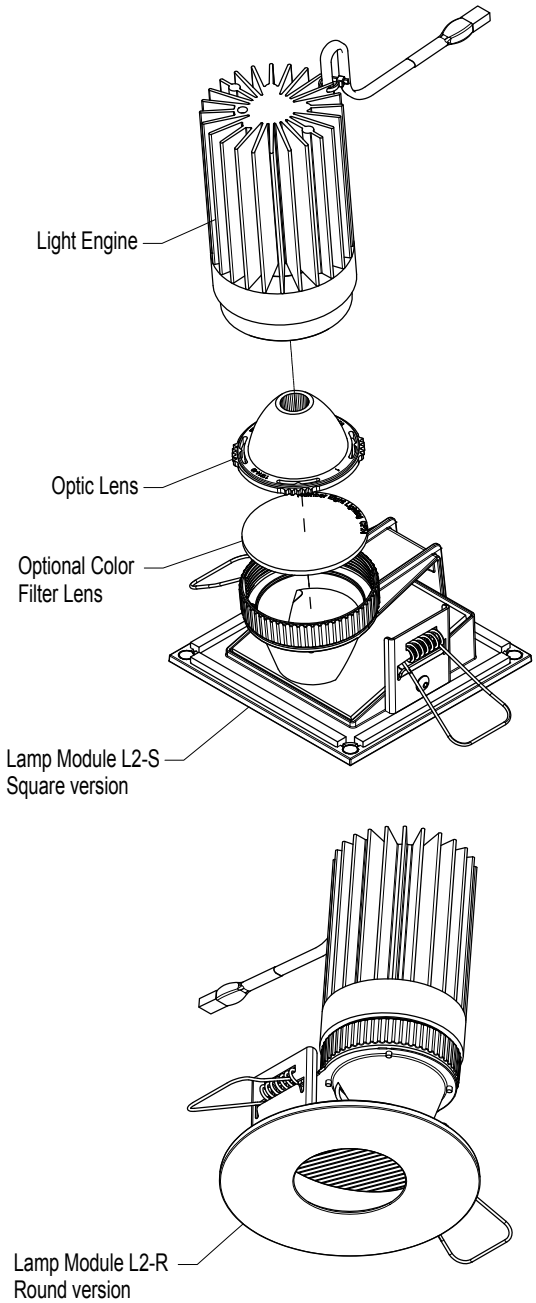

FIG 3.1 Installing Lamp Module Accessories

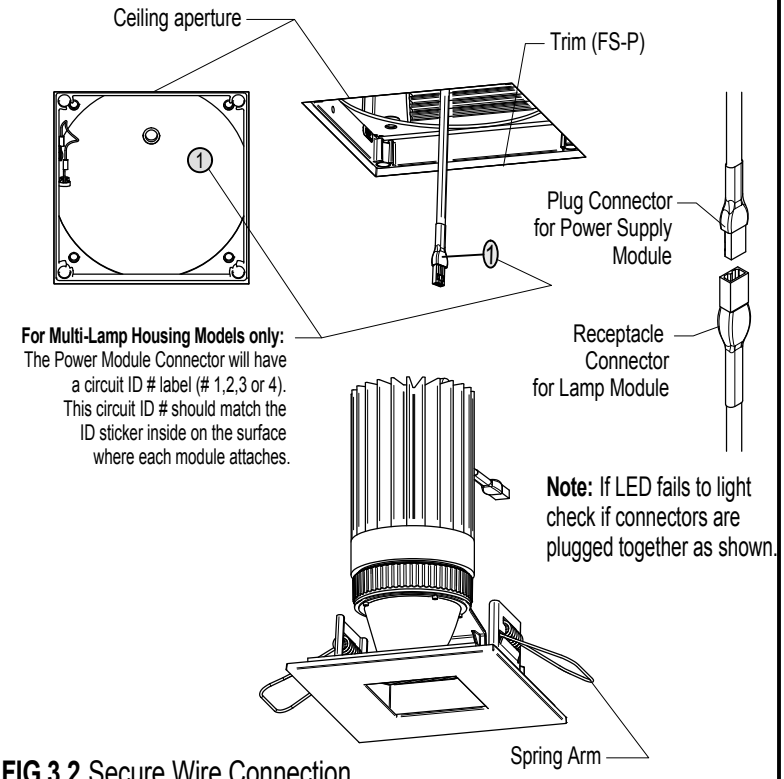

FIG.3.2 Secure Wire Connection

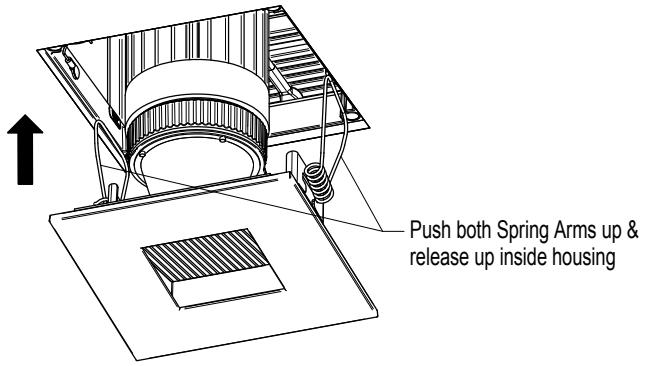

FIG. 3.3 Securing Lamp Module to Housing & Trim

CAUTION:
- ▶Turn off power at wall switch & review all instructions on this page before proceeding.
- ▶Always allow lamp module to cool before servicing.

Installation:

Step 1 Before installing Lamp Module, make sure LED Power Supply Module is installed.
Note: For Sloped Ceilings Only-See recommended Housing installation orientation - FIG 4.1

Step 2 Adjust vertical to 90 deg position as shown in Fig. 4.3. **Note: angle adjustment is limited on ceilings over 5/8" thick & when Mirror Reflector is aligned facing narrow sides of Housing.**

Step 3 Plug Wire Connector from Lamp Module into Power Supply Module Connector. Push wire up inside Housing to avoid interference during installation - Fig 4.4.

Step 4 Choose general aiming position desired. Attach Safety Cable from Trim Cable Clip to Lamp Module before inserting Lamp Module through Housing aperature. Seat Trim Plate into Trim as shown.

Note: horizontal & vertical aiming position adjustment is lockable using Lock Knobs. General aiming position is easily changed by pulling Lamp Module out slightly & rotating into one of 4 positions - Fig 4.2 & 4.3.

Removal: To remove Lamp Module follow steps above in reverse order.

Replacement: Contact Number Eight Lighting for replacement LED Engine Subasy or LED emitter. Remove Lamp Module & unscrew LED Engine Subasy for replacement or acess to LED emitter.

Optional Accessories: Unscrew LED Engine Subasy to add/remove Lens accessories - Fig 4.2.

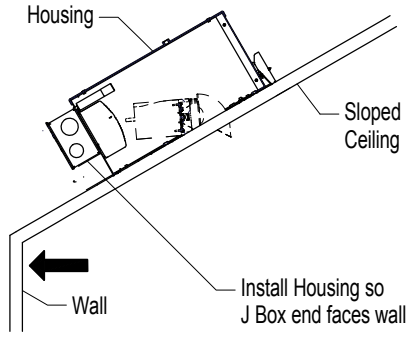

FIG 4.1 Recommended Housing Orientation for Sloped Ceiling

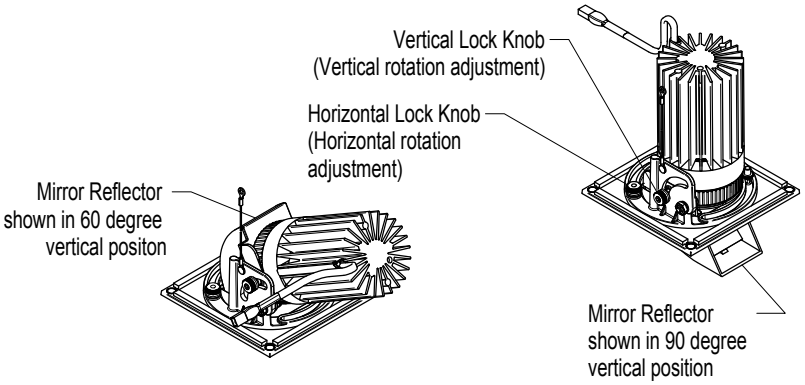

FIG. 4.3 Lamp Module Adjustment

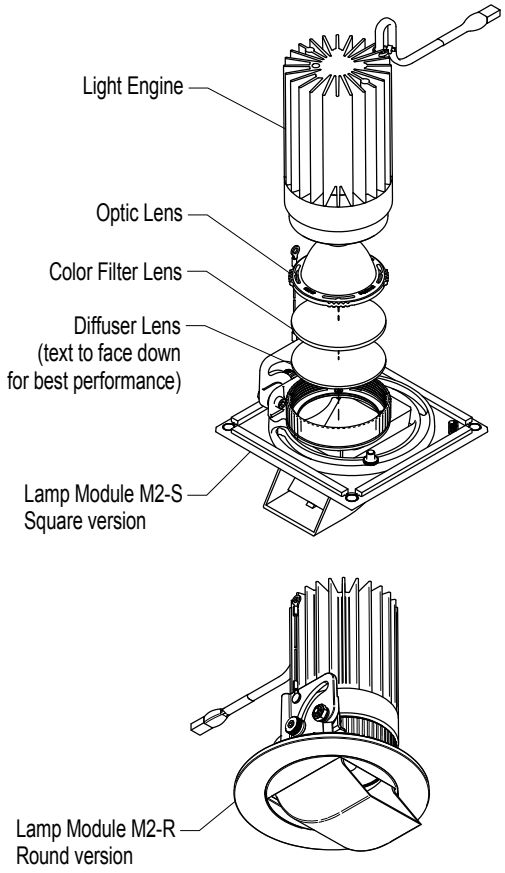

FIG 4.2 Installing Lamp Module Accessories

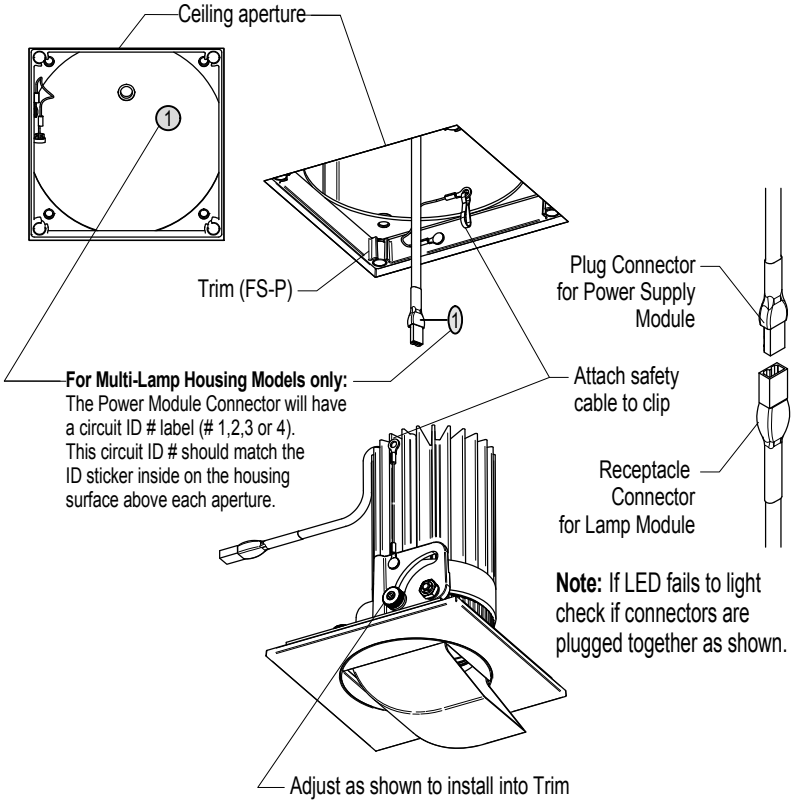

FIG. 4.4 Securing Lamp Module to Housing & Trim

LED Power Supply Module Removal/Replacement

11512-5 Rev A

CAUTION:
- ▶Disconnect power at circuit breaker or fuse panel before proceeding.
- ▶Always allow Lamp & Power Supply Module to cool before removing.

To remove LED Power Supply Modules

Step 1 To access Power Supply Module the Lamp Module must first be removed (For LED Lamp Modules refer to Pages 1-4 / For Incandescent Lamp Modules refer to Instructions P/N 11119).
Step 2 Unscrew & remove Thumb Knob inside Housing as shown. Tilt Power Supply Module to disengage from housing as shown-FIG 5.1.
Step 3 Pull Power Supply Module away from threaded stud while pulling wires & Power Connectors out of the Junction Box-FIG 5.2.
Step 4 Disconnect Power Supply Connectors. For models with 0-10 drivers, also disconnect purple & gray wires-FIG 5.2.
Step 5 Pull Power Supply Module through aperture-FIG 5.3.
For Replacement: Replace all parts in steps above in reverse order. Be sure hooks engage into junction box as shown in FIG 5.4.

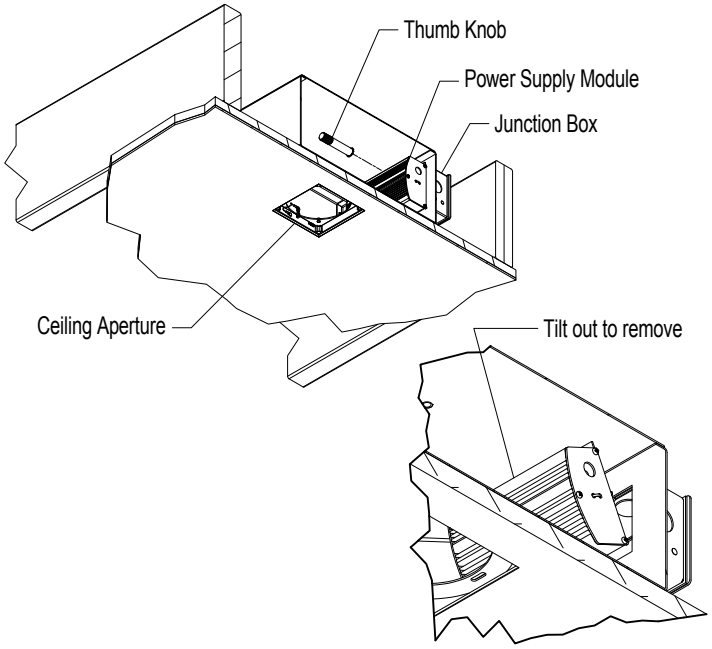

FIG 5.1 Remove Thumb Knob & Disengage Power Supply Module

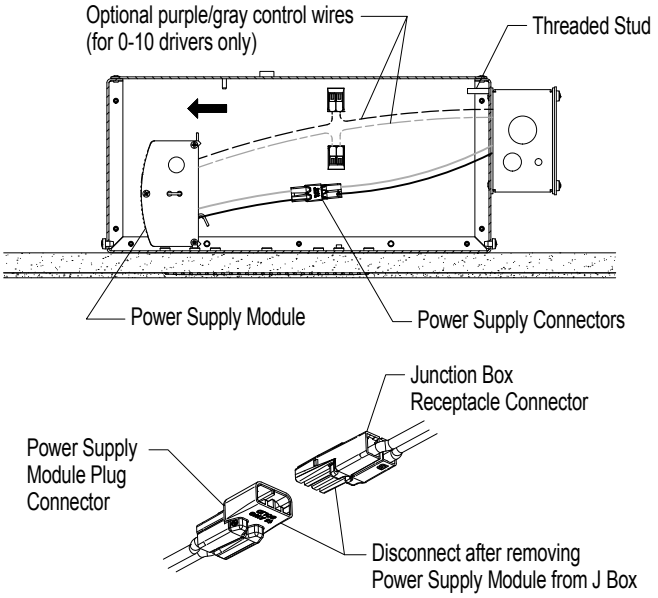

FIG 5.2 Remove Power Supply Module & disconnect wires

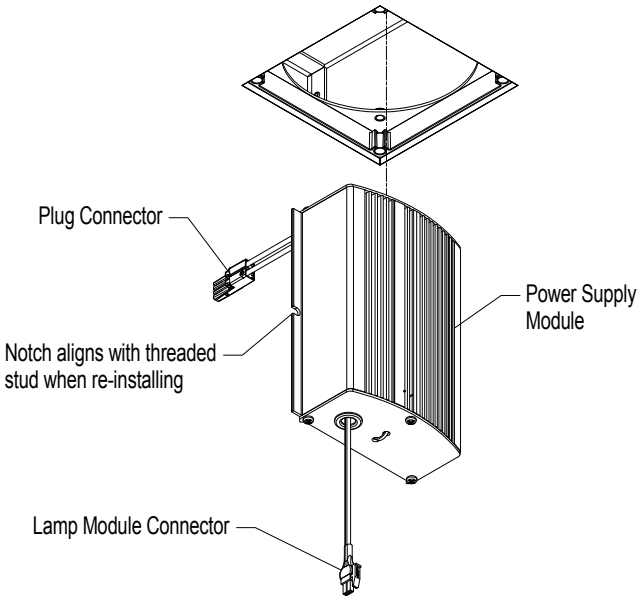

FIG 5.3 Pass Power Supply Module Through Aperture

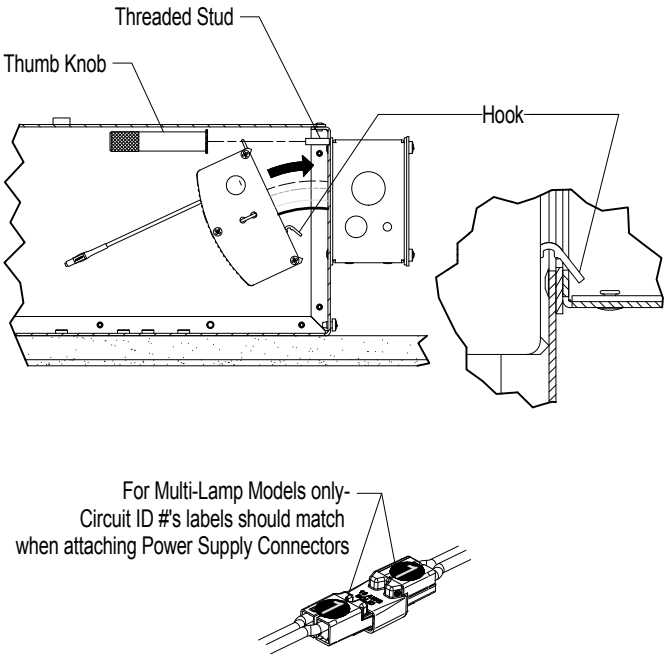

FIG 5.4 Replace Power Supply Module & Secure With Thumb Knob